Protected by copyright. Copying for private or commercial purposes, in part or in whole, is not permitted unless authorised by Volkswagen AG. Volkswagen AG does not guarantee or accept any liability with respect to the correctness of information in this document. Copyright by Volkswagen AG.

1AV injection and ignition system

Engine ID	AEE	ALM							

Edition 08.1997

satelettronica

List of Workshop Manual Repair GroupsList of Workshop Manual Repair GroupsList of Workshop Manual Repair Groups

1AV injection and ignition system

Repair Group

01 - Self-diagnosis

24 - Mixture preparation, Injection

28 - Ignition system

Protected by copyright. Copying for private or commercial purposes, in part or in whole, is not permitted unless authorised by Volkswagen AG. Volkswagen AG does not guarantee or accept any liability with respect to the correctness of information in this document. Copyright by Volkswagen AG.

satelettronica

Technical information should always be available to the foremen and mechanics, because their careful and constant adherence to the instructions is essential to ensure vehicle road-worthiness and safety. In addition, the normal basic safety precautions for working on motor vehicles must, as a matter of course, be observed.

All rights reserved.
No reproduction without prior agreement from publisher.

Copyright © 2011 Volkswagen AG, Wolfsburg

00056406820

Contents

01 - Self-diagnosis . . . 1

1 Self-diagnosis . . . 1
1.1 Self-diagnosis . . . 1
1.2 Features of self-diagnosis . . . 1
1.3 Technical data of self-diagnosis . . . 1
1.4 Connecting fault reader V.A.G 1551 and selecting engine control unit . . . 2
1.5 Connecting Vehicle Diagnosis, Testing and Information system VAS 5051 and selecting engine electronics control unit . . . 4
1.6 Interrogating and erasing fault memory . . . 6
1.7 Fault table . . . 8

2 Final control diagnosis . . . 12
2.1 Final control diagnosis . . . 12
2.2 Performing final control diagnosis . . . 12

3 Measured value blocks . . . 15
3.1 Measured value blocks . . . 15
3.2 Read measured value block and basic settings . . . 15
3.3 Display group overview . . . 16

24 - Mixture preparation, Injection . . . 19

1 Servicing injection system . . . 19
1.1 Servicing injection system . . . 19
1.2 Fitting locations overview . . . 19
1.3 General notes on injection . . . 21
1.4 Removing and installing parts of the injection system . . . 23
1.5 Dismantling and assembling fuel rail with injectors . . . 29
1.6 Dismantling and assembling intake manifold . . . 30
1.7 Dismantling and assembling air cleaner . . . 32
1.8 Safety precautions . . . 35
1.9 Rules for cleanliness . . . 35
1.10 Technical data . . . 35

2 Check components and functions . . . 36
2.1 Check components and functions . . . 36
2.2 Checking Lambda probe and Lambda control . . . 36
2.3 Checking Lambda probe heating . . . 38
2.4 Checking engine operating mode . . . 39
2.5 Checking throttle valve control part . . . 41
2.6 Checking intake manifold pressure sender . . . 47
2.7 Checking coolant temperature sender . . . 49
2.8 Checking intake air temperature sender . . . 52
2.9 Checking injectors . . . 55
2.10 Checking fuel pressure regulator and holding pressure . . . 57
2.11 Checking intake air system for leaks (unmetered air) . . . 60
2.12 Checking intake air preheating . . . 60
2.13 Wire routing engine wiring loom . . . 62

3 Replacing and matching engine control unit . . . 63
3.1 Replacing and matching engine control unit . . . 63
3.2 Replacing engine control unit . . . 63
3.3 Performing basic setting . . . 64
3.4 Matching engine control unit to electronic immobilizer . . . 65
3.5 Checking control unit voltage supply . . . 66

4 Checking additional signals . . . 67
4.1 Checking additional signals . . . 67
4.2 Testing speed signal . . . 67

Protected by copyright. Copying for private or commercial purposes, in part or in whole, is not permitted unless authorised by Volkswagen AG. Volkswagen AG does not guarantee or accept any liability with respect to the correctness of information in this document. Copyright by Volkswagen AG.

satelettronica

4.3 Checking air conditioner and air conditioner compressor signals 69

28 - Ignition system 71

1 Servicing ignition system 71
1.1 Servicing ignition system 71
1.2 General notes on ignition system 71
1.3 Removing and installing parts of the ignition system 72
1.4 Dismantling and assembling distributor 75
1.5 Safety precautions 76
1.6 Adjustment data, Spark plugs 76
1.7 Checking and adjusting ignition timing 76
1.8 Checking Hall sender 78
1.9 Checking ignition transformer and output stage 79
1.10 Checking knock sensor 81

Protected by copyright. Copying for private or commercial purposes, in part or in whole, is not permitted unless authorised by Volkswagen AG. Volkswagen AG does not guarantee or accept any liability with respect to the correctness of information in this document. Copyright by Volkswagen AG.
satelettronica

01 - Self-diagnosis

1 - Self-diagnosis

1.1 - Self-diagnosis

Note:

The self-diagnosis monitors only a part of the injection and ignition system. For fault finding the binder "Fault finding engine" must also be used in every case.

1.2 - Features of self-diagnosis

The engine control unit (control unit for 1AV fuel injection and ignition system -J382) is equipped with a fault memory.

If faults occur in the sensors and components being monitored, they will be stored in the fault memory together with an indication of the type of fault.

Faults which only occur sporadically will have the addition "sporadic fault" on the print out. These faults will be indicated on the display by the addition "/SP". The cause of sporadic faults can be e.g. a loose contact or a brief open circuit. If a sporadic fault does not occur again within 40 engine starts, it will be erased from the fault memory.

The faults stored can be read-out with the fault reader V.A.G 1551 or the vehicle system tester V.A.G 1552 => Page 6 .

The fault memory must be erased after the faults has been eliminated => Page 6 .

Note:

General information for self-diagnosis is in the fault reader V.A.G 1551 and the vehicle system tester V.A.G 1552 instruction manuals.

1.3 - Technical data of self-diagnosis

Equipment

- The data transfer between control unit and fault reader V.A.G 1551 or vehicle system tester V.A.G 1552 is carried out in the operating mode "Rapid data transfer".
- The fault memory is equipped with a non-volatile memory.

Interrogating control unit versions

The control unit version is displayed when the fault reader V.A.G 1551 or the vehicle system tester V.A.G 1552 is connected and engine electronics control unit selected => Page 2 .

Selectable functions when using the fault reader V.A.G 1551 or V.A.G 1552

The prerequisites for selecting the desired functions can be taken from the following table.

Protected by copyright. Copyright by Volkswagen AG. Copying for private or commercial purposes, in part or in whole, is not permitted unless authorised by Volkswagen AG. Volkswagen AG does not guarantee or accept any liability with respect to the correctness of information in this document.

satelettronica

Function	Prerequisite	
	Engine stationary, ignition switched on	Engine running at idling speed
02 Interrogating fault memory	yes	yes
03 Final control diagnosis	yes	no
04 Basic setting	yes1)	yes2)3)
05 Erasing fault memory	yes	yes
06 Ending output	yes	yes
08 Read measured value block	yes	yes
09 Read individual measured value4)	yes	yes
10 Adaption	yes	no

1) Must be carried out after performing the following work: Replacing control unit, throttle valve control part or engine.

2) Only possible when the coolant temperature is above 80 °C. Prior to this, this function is blocked.

3) Must be carried out when checking and adjusting the ignition timing point.

4) Currently is only used for checks in the factory.

1.4 - Connecting fault reader V.A.G 1551 and selecting engine control unit

Special tools, testers, measuring instruments and auxiliary items required

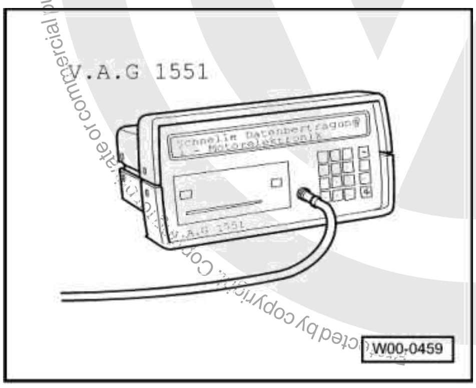

- Fault reader V.A.G 1551

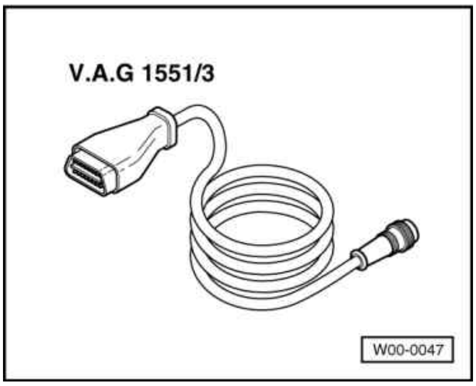

Protected by copyright. Copying for private or commercial purposes, in part or in whole, is not permitted unless authorised by Volkswagen AG. Volkswagen AG does not guarantee or accept any liability with respect to the correctness of information in this document. Copyright by Volkswagen AG.

satelettronica

- Cable V.A.G 1551/3

Note:

The vehicle system tester V.A.G 1552 can be used instead of the fault reader V.A.G 1551, however a print-out is not possible.

Check conditions

- Battery voltage at least 11 V.
- Fuse No. 21 must be OK.
- Earth connections on front of clutch housing and on cylinder head OK.

Work sequence

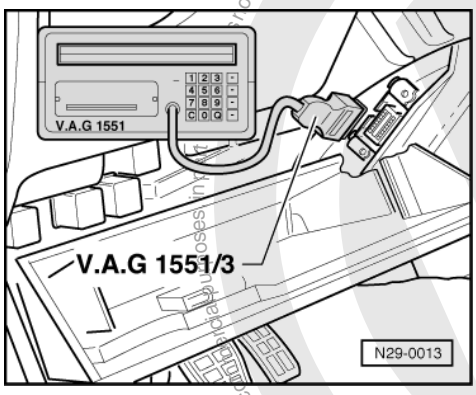

- -> Fold driver's side stowage compartment down.
- Connect fault reader V.A.G 1551 with cable V.A.G 1551/3.

After the fault reader has been connected:

- Depending upon desired function:
  Switch ignition on
  or
  Start engine => Page 1 , Table "Selectable functions".

Notes:

- If the display remains blank, check diagnostic connector voltage supply =>Fault finding programme in "Current flow diagrams, Electrical fault finding and Fitting locations" binder
- If the display does not indicate as described in the work sequence:

=> Fault reader operating instructions

- If due to an input fault "Fault in the data transfer!" is displayed, pull wire off fault reader, reconnect and repeat work step.

-> Indicated on display:

```
V.A.G - SELF DIAGNOSIS     HELP
     1 - Rapid data transfer*
     2 - Flash code output*
```

* Appears alternately

- Operate fault reader taking into account the information on the display:
- Press key 1 for "Rapid data transfer".
- Press keys 0 and 1 for address word "Engine electronics" and confirm entry with Q key.

-> The fault reader V.A.G 1551 display will show the system designation and version.

Copyrighted by Volkswagen AG. Volkswagen AG does not guarantee or accept any liability with respect to the correctness of information in this document. Copyright by Volkswagen AG. Copyrighted by copyright. Not permitted unless authorised by Volkswagen AG. Volkswagen AG does not guarantee or accept any liability with respect to the correctness of information in this document. Copyright by Volkswagen AG.
satelettronica

- Press the ⇒key.

-> Indicated on display:

```
Rapid data transfer     HELP
Select function XX
```

- Further measures see repair procedures.

1.5 - Connecting Vehicle Diagnosis, Testing and Information system VAS 5051 and selecting engine electronics control unit

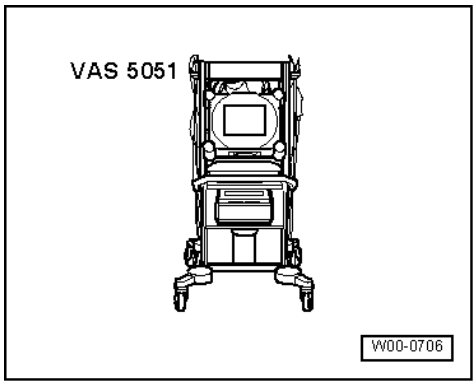

All the functions that were previously possible with the V.A.G 1551/1552 can be performed with the new tester VAS 5051 in operating mode Vehicle self-diagnosis:

=> Operating instructions for vehicle diagnosis, Testing and Information system VAS 5051.

Special tools, workshop equipment, testers, measuring instruments and auxiliary items required

- -> VAS 5051 Vehicle diagnosis, Testing and Information system

Test conditions

- Fuse No. 21 must be OK.
- The battery voltage must be at least 11.5 V.
- Earth connection between engine (on gearbox bell housing) and body (below battery) OK.

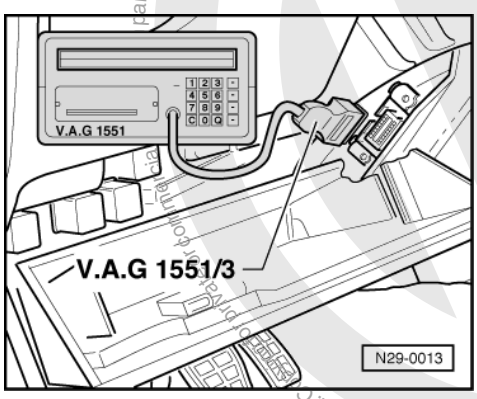

Work sequence

- Connect tester VAS 5051 with diagnosis cable VAS 5051/1 or VAS 5051/3 as follows:
- -> Fold driver's side stowage compartment down.
- Fit diagnosis cable connector onto diagnosis connector.
- Depending upon desired function
  switch ignition on
  or

satelettronica

start engine and run at idling speed. Selectable functions => Page 1 .

Note:

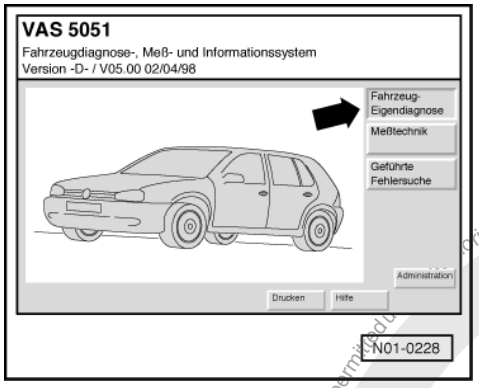

- The display fields will be displayed from top to bottom in functions 04 - Basic settings or 08 - Read data block.
- If the display does not indicate as described in the work sequence:

=> Operating instructions for Vehicle Diagnosis, Testing and Information System VAS 5051.

-> Indicated on display:

Selecting operating mode:

- Press key 1 for "Rapid data transfer".

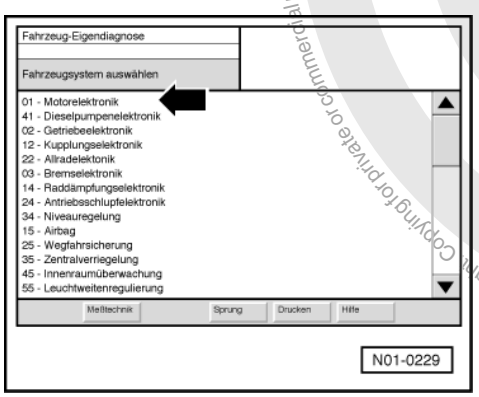

-> Indicated on display:

Selecting vehicle system:

- Press "01 - Engine electronics" on display -arrow-.

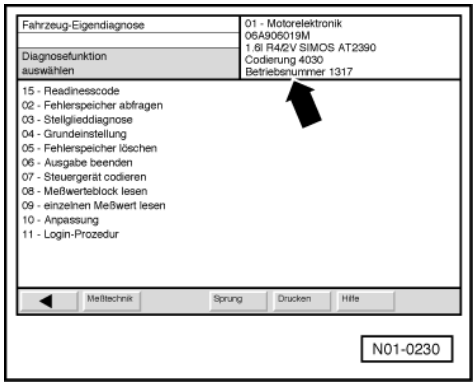

Protected by copyright. Copying for private or commercial purposes, in part or whole, is not permitted unless authorised by Volkswagen AG. Volkswagen AG does not guarantee or accept any liability with respect to the correctness of information in this document. Copyright by Volkswagen AG.
satelettronica

-> The control unit identification and coding -arrow- is shown on display e.g.:

Note:

Replace control unit if the control version displayed does not correspond to the vehicle

=> Page 63 .

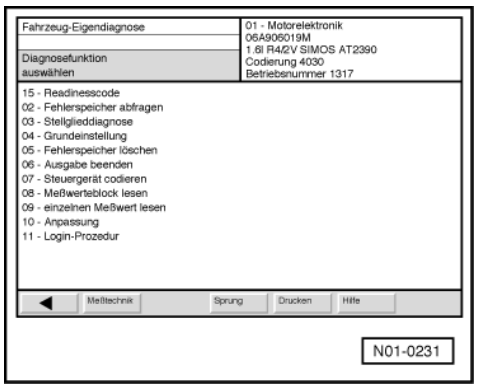

-> Indicated on display:

Selecting diagnosis function:

At this point all diagnosis functions are available.

- Press desired function on display.
- Further measures see repair procedures.

1.6 - Interrogating and erasing fault memory

Special tools, testers, measuring instruments and auxiliary items required

- Fault reader V.A.G 1551 (or vehicle system tester V.A.G 1552) with cable V.A.G 1551/3

Work sequence

- Connect fault reader V.A.G 1551 (V.A.G 1552). Start engine and select "Address word" 01 of engine control unit. When doing this the engine must be running at idling speed.
  (Connecting fault reader and selecting engine control unit => Page 2 .)

Only when engine does not start:

- Switch ignition on.

- Switch on fault reader printer with the print key. The warning lamp in key must light up.

-> Indicated on display:

```
Rapid data transfer      HELP
Select function XX
```

- Operate fault reader taking into account the information on the display:
- Press keys 0 and 2 for function "Interrogate fault memory" and confirm entry with Q key.

-> The number of faults stored or "No fault recognised!" will be shown on the display.

```
X Faults recognised!
```

Copyright by Volkswagen AG. Volkswagen AG does not guarantee or accept any liability with respect to the correctness of information in this document. Copying or printing in part or in whole is not permitted unless authorised by Volkswagen AG. Copyright by Volkswagen AG
satelettronica

If one or more faults are stored:

The stored faults will be displayed and printed out one after the other.

-> After the stored faults have been printed out, the display will show:

```
Rapid data transfer      HELP
Select function XX
```

- Press keys 0 and 5 for the function "Erase fault memory" and confirm entry with Q key.

Note:

If the ignition is switched off between "Interrogate fault memory" and "Erase fault memory" the fault memory will not be erased.

-> Indicated on display:

```
Rapid data transfer
Fault memory is erased!
```

- Press the ⇒key.
- Press keys 0 and 6 for the function "End output" and confirm entry with the Q key.
- Eliminate the printed out faults using the appropriate fault table.
  => Page 8 .

During test and assembly work faults can be recognised from other control units like e.g. plug disconnected. Therefore on completion the fault memories of all control units must be interrogated and erased. To do this:

- Press key 0 twice for address word "Automatic test sequence" and confirm entry with Q key. The V.A.G 1551 transmits all known address words one after the other.

When a control unit answers with its identification the number of stored faults appears on the display or "No fault recognised".

Any system faults that are stored will be displayed one after the other and printed out. The V.A.G 1551 will then transmit the next address word.

-> The automatic test sequence has ended when following is indicated on display:

```
V.A.G SELF-DIAGNOSIS     HELP
1 - Rapid data transfer*
2 - Flash code output*
```

- Erase all fault memories and then carry out a road test.

  During the road test the following operating conditions must be fulfilled:
  - The coolant temperature must exceed 80 °C .
  - When the temperature is reached, the operating conditions
    Idling
    Part throttle
    Full throttle
    Overrun
    must be attained several times.
  - At full throttle the speed must exceed 3500 rpm.

- Again interrogate the fault memories of all control units using the "automatic test sequence".

If no fault is stored:

- Press the ⇒key.

-> Indicated on display:

```
Rapid data transfer      HELP
Select function XX
```

Protected by copyright. Copyright by Volkswagen AG. Copying for private and commercial purposes, in part or in whole, is not permitted unless authorised by Volkswagen AG. Volkswagen AG does not guarantee or accept any liability with respect to the correctness of information in this document.

satelettronica

- Press keys 0 and 6 for the function "End output" and confirm entry with the Q key.

Note:

If the self-diagnosis has not detected a fault, use the appropriate fault table in "Fault finding engine" binder for further fault finding.

1.7 - Fault table

Notes:

- The fault tables are listed according to the 5 digit fault code on the left.
- Explanation of the fault types (e.g. "open circuit/short circuit to earth"):

=> Fault reader operating instructions

- If components are indicated as faulty:
  First check the wiring and connectors to these components as well as the system earth connections according to current flow diagram. This is particularly relevant if faults are output as "occurring sporadically" (SP).

V.A.G 1551 print-out	Possible causes of fault	Possible effects	Fault remedy
No fault recognized!	If a complaint exists: Fault not recognised during self-diagnosis	---	Continue fault finding according to fault table, in "Engine fault finding" binder.

V.A.G 1551 print-out	Possible causes of fault	Possible effects	Fault remedy
00282 Throttle valve positioner - V601)			
Short to earth	- Short to earth - V60 defective/sticking in closed direction	- Cold starting problems - Cold idling problems - Hard load changes - Idling problems	- Check V60 =>Page 41 , checking throttle valve control part
Short to positive	- Short to positive - V60 defective/sticking in open direction		
Open circuit	- Wiring open circuit		
Signal out of tolerance	- Short to earth and/or battery positive		

1) The throttle valve positioner (V60) is a component of the throttle valve control part (J338).

V.A.G 1551 print-out	Possible causes of fault	Possible effects	Fault remedy
00516 Idling switch -F601) Unplausible signal	- F60 defective	- Idling problems - Driving characteristics faults when driving off	- Carry out basic setting =>Page 41 , check throttle valve control part
00518 Throttle valve potentiometer -G692) Short to earth	- G69 defective - Wiring has short to earth	- Poor throttle response - Hard load changes	- Carry out basic setting =>Page 64

Copyright by Volkswagen AG. Volkswagen AG does not guarantee or accept any liability with respect to the correctness of information in this document. Copying for private or commercial purposes, in part or in whole, is not permitted unless authorised by Volkswagen AG.

satelettronica

V.A.G 1551 print-out	Possible causes of fault	Possible effects	Fault remedy
Open circuit/Short to positive	- Open circuit in earth wire - Wiring has short to positive - G69 defective	- Increased emission values - No full throttle recognition	- Check G69 =>Page 41 , checking throttle valve control part

1) The idling speed switch (F60) is a component of the throttle valve control part (J338).

2) The throttle valve potentiometer (G69) is a component of the throttle valve control part (J338).

V.A.G 1551 print-out	Possible causes of fault	Possible effects	Fault remedy
00519 Intake manifold pressure sender - G71			
Short to positive	Wiring has short to positive	- Increased emissions values - Poor throttle response - Hard load changes	- Check G71 =>Page 47
Open circuit/short to earth	- Open circuit in earth wire - Wiring has short to earth - G71 defective		
Implausible signal	- Loose contact - G71 defective		

V.A.G 1551 print-out	Possible causes of fault	Possible effects	Fault remedy
00522 Coolant temperature sender -G62			
Short to earth	- Wiring has short to earth - G62 defective	- Poor cold starting - Poor hot starting	- Check G62 =>Page 49
Open circuit/short to positive	- Wiring open circuit or short to positive - G62 defective		
00523 Intake air temperature sender - G42			
Short to earth	- Wiring has short to earth - G42 defective	- Poor hot starting - Increased emissions values	- Check G42 =>Page 52
Open circuit/short to positive	- Wiring open circuit or short to positive - G42 defective		

V.A.G 1551 print-out	Possible causes of fault	Possible effects	Fault remedy
00524 Knock sensor 1 -G61			
Signal too small	- Wiring open circuit or short to earth - G61 defective	- Ignition timing point has been retarded by 15 < ° - Reduced performance - High fuel consumption	- Check G61 => Page 81
00525 Lambda probe -G39			
Short to positive	- Wiring has short to positive - G39 defective	- No Lambda control	- Check Lambda probe and Lambda control =>Page 36
Signal too large	- G39 defective		
Signal too small	- G39 defective - Wiring has short to earth		

V.A.G 1551 print-out	Possible causes of fault	Possible effects	Fault remedy
00529			

Protected by copyright. Copyright by Volkswagen AG. Volkswagen AG does not guarantee or accept any liability with respect to the correctness of information in this document. Copyright by Volkswagen AG. Not permitted without authorisation, in part or whole, for commercial purposes.
satelettronica

V.A.G 1551 print-out	Possible causes of fault	Possible effects	Fault remedy
Rpm information missing No signal	- Hall sender (G40) in distributor defective - Wiring open circuit - Wiring has short to positive - Wiring has short to earth	- Engine does not start	- Check G40 => Page 78

=> Current flow diagrams, Electrical fault finding and Fitting locations binder

V.A.G 1551 print-out	Possible causes of fault	Possible effects	Fault remedy
00530 Throttle valve positioner/potentiometer -G881) Open circuit/short to positive	- Wiring open circuit or short to positive - G88 defective	- Cold starting problems - Idling speed not within tolerances	- Check G88 =>Page 41 , check throttle valve control part
Short to earth	- Wiring has short to - earth - G88 defective	- Cold idling speed problems - Rough idling	
00532 Supply voltage Signal too large	- Battery voltage above 16.3 V	- No idling speed adaption	- Check alternator

1) The throttle valve positioner/potentiometer (G88) is a component of the throttle valve control part (J338).

V.A.G 1551 print-out	Possible causes of fault	Possible effects	Fault remedy
00609 Ignition output 1 Short to positive	- Wiring to ignition transformer has short to positive	- Engine does not start	- Check ignition transformer =>Page 79
Open circuit/short to earth	- Wiring open circuit in earth wire - Wiring has short to earth		
01087 Basic setting not carried out	The throttle valve control part learning sequence has not been completed	---	- Carry out basic setting =>Page 64
01126 Engine speed signal Short to positive	- Wiring open circuit or short to positive	- Rev. counter does not operate	- Check speed signal => Page 12 , final control diagnosis
Short to earth	- Wiring has short to earth		

V.A.G 1551 print-out	Possible causes of fault	Possible effects	Fault remedy
01247 Activated charcoal filter solenoid valve 1 -N80 Open circuit/short to earth	- Wiring open circuit or short to earth - N80 defective	- Rough idling - Fuel odours	- Check N80 => Page 12 , final control diagnosis
Short to positive	- Wiring has short to positive - N80 defective		

V.A.G 1551 print-out	Possible causes of fault	Possible effects	Fault remedy
01249			

Protected by copyright. Copying for private or commercial purposes, in part or in whole, is not permitted unless authorised by Volkswagen AG. Volkswagen AG does not guarantee or accept any liability with respect to the correctness of information in this document. Copyright by Volkswagen AG.

satelettronica

V.A.G 1551 print-out	Possible causes of fault	Possible effects	Fault remedy
No.1 cyl. injector -N30 Short to positive	- N30 defective - Wiring has short to positive	- Increased emissions values - Poor starting - Poor throttle response - Rough idling	- Check N30...N33 => Page 55 , checking injectors
Open circuit/short to earth	- N30 defective - Open circuit in earth wire - Short to earth		
01250 No. 2 cyl. injector -N31 Short to positive	See fault code 01249, Cyl. 1		
Open circuit/short to earth			

V.A.G 1551 print-out	Possible causes of fault	Possible effects	Fault remedy
01251 No. 3 cyl. injector -N32 Short to positive	See fault code 01249, Cyl. 1		
Open circuit/short to earth			
01252 No. 4 cyl. injector -N33 Short to positive	See fault code 01249, Cyl. 1		
Open circuit/short to earth			

V.A.G 1551 print-out	Possible causes of fault	Possible effects	Fault remedy
01259 Fuel pump relay -J17 Short to positive	- Wiring to ignition transformer has short to positive	- Engine does not start	- Check ignition transformer =>Page 79
Open circuit/short to earth	- J17 defective - Wiring open circuit in earth cable - Short to earth		
17978 Engine control unit blocked	- Attempted manipulation - Short in communication cable - Incorrect coding - Immobilizer control unit defective/missing	- Engine starts briefly and then stops again	- Adapt engine control unit to electronic immobilizer => Page 65 Check electronic immobilizer: => Repair group 96; Servicing electronic immobilizer

V.A.G 1551 print-out	Possible causes of fault	Possible effects	Fault remedy
65535 Control unit defective	- Control unit internally defective - Attempted manipulation of control unit	- Engine running problems - Engine will not run	- Renew J382 => Page 63

Copyright by Volkswagen AG. Volkswagen AG does not guarantee or accept any liability with respect to the correctness of information in this document. Copyright by Volkswagen AG. Reproduction, in part or in whole, is not permitted unless authorised by Volkswagen AG for commercial purposes or private use.

satelettronica

2 - Final control diagnosis

2.1 - Final control diagnosis

2.2 - Performing final control diagnosis

Photocopy, copy, reproduction, in part or in whole, is not permitted unless authorised by Volkswagen AG. Volkswagen AG does not guarantee or accept any liability with respect to the correctness of information in this document. Copyright by Volkswagen AG.

The final control diagnosis activates the following components in the stated sequence:

1. Throttle valve positioner (V60)

2. Activated charcoal filter solenoid valve 1 (N80)

3. Engine speed signal

4. Fuel pump relay (J17)

5. Engine/air conditioner compressor electrical connection

Special tools, testers, measuring instruments and auxiliary items required

- Fault reader V.A.G 1551 or vehicle system tester V.A.G 1552 with cable V.A.G 1551/3
- Test box V.A.G 1598/18
- Hand multimeter V.A.G 1526 or multimeter V.A.G 1715
- Diode test lamp V.A.G 1527
- Adapter set V.A.G 1594
- Current flow diagram

Check conditions

- Throttle valve potentiometer (G69) must be OK.
- Fuses 15, 18 and 21 must be OK.

Test requirements for vehicles with air conditioning system

- Vehicle at room temperature (warmer than + 15 °C).
- Air conditioning system must be switched on.
- Select lowest temperature and highest blower speed.

Notes:

If the final control diagnosis is to be repeated without the engine being started in between time, switch ignition off for approx. 20 seconds.

Work sequence

- Connect the fault reader V.A.G 1551 (V.A.G 1552). Then switch ignition on and select engine control unit with the "Address word" 01.
  (Connecting fault reader and selecting engine control unit => Page 2 .)

-> Indicated on display:

```
Rapid data transfer     HELP
Select function XX
```

- Operate fault reader taking into account the information on the display:
- Press keys 0 and 3 for the function "Final control diagnosis".

-> Indicated on display:

```
Rapid data transfer     Q
03 Final control diagnosis
```

satelettronica

Activate throttle valve positioner (V60):

- Confirm input with Q key.

-> Indicated on display:

```
Final control diagnosis
Throttle valve positioner-V60
```

The throttle valve positioner must open and close the throttle valve until switching to the next final control by pressing the ⇒key.

If the throttle valve positioner does not move:

- Check throttle valve positioner
  =>Page 41 , checking throttle valve control part

Activate solenoid valve 1 for activated charcoal filter (N80):

- Press ⇒key.

-> Indicated on display:

```
Final control diagnosis
Activ. charcoal filter solenoid valve
1     -N80
```

The solenoid valve (right-hand suspension turret) must click, until activating the next final control element by pressing ⇒key.

- Pull hose off activated charcoal filter at solenoid valve.
- Connect an auxiliary hose to the vacant valve connection.
- Blow into auxiliary hose during final control diagnosis (in direction of throttle valve control part).
  Valve must open and close

If the solenoid valve does not click:

- Continue check => Page 14 .

Display engine speed signal:

Note:

The test is only possible for vehicles with a rev. counter. On vehicles without rev. counter switch to the next final control by pressing the ⇒ key.

- Press ⇒key.

-> Indicated on display:

```
Final control diagnosis
Engine speed signal
```

The rev. counter must display approx. 3000 rpm, until next final control element is activated by pressing the ⇒key.

If no display appears:

- Check the rev. counter.

=> Current flow diagrams, Electrical fault finding and Fitting locations, Fuel supply system

Actuate fuel pump relay (J17):

- Press ⇒key.

-> Indicated on display:

Protected by copyright. Copying for private or commercial purposes, in part or in whole, is not permitted unless authorised by Volkswagen AG. Volkswagen AG does not guarantee or accept any liability with respect to the correctness of information in this document. Copyright by Volkswagen AG.
satelettronica

```
Final control diagnosis
Fuel pump relay J17
```

The fuel pump relay (on the relay plate with fuse box, relay position 12) must click until switching to the next final control by pressing the ⇒key.

Note:

During the activation of the fuel pump relay the fuel pump must be heard to run at intervals.

If the relay does not click:

- Check fuel pump relay:

=> Current flow diagrams, Electrical fault finding and Fitting locations, Fuel supply system

Check electrical connection to air conditioner:

Note:

The test step is only for vehicles with air conditioner. On vehicles without air conditioner end final control diagnosis by pressing ⇒key.

-> Indicated on display:

```
Final control diagnosis
Engine/air cond. compr. electr.
connection
```

The air conditioner compressor magnetic coupling must click, until ending final control diagnosis by pressing ⇒key.

If the magnetic coupling does not click:

- Check air conditioner.

=> Heater, air conditioner

- Press ⇒key.

-> Indicated on display:

```
Rapid data transfer      HELP
Select function XX
```

- Press keys 0 and 6 for the function "End output" and confirm entry with the Q key.
- Switch off ignition.

Note:

After completion of the final control diagnosis switch off ignition. If the ignition is not switched off before attempting to start, the engine will not run, as the injectors and the ignition transformer will not be activated.

Continuation of check when the activated charcoal filter solenoid 1 does not click:

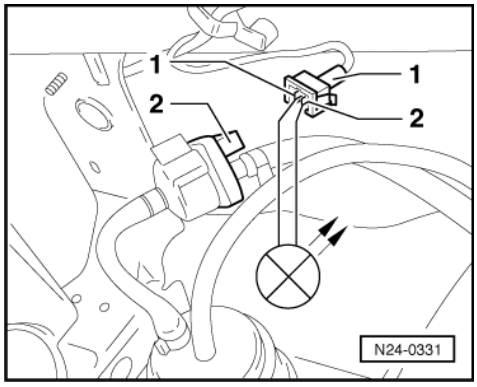

Protected by copyright. Copying for private or commercial purposes, in part or in whole, is not permitted unless authorised by Volkswagen AG. Volkswagen AG does not guarantee or accept any liability with respect to the correctness of information in this document. Copyright by Volkswagen AG.

satelettronica

- -> Pull connector -1- off solenoid valve -2- and connect diode test lamp V.A.G 1527 with aux. cables from V.A.G 1594 to disconnected connector.
  The LED must flash (bright/darker)

LED flashes:

- Proceed with final control diagnosis until completed.
- Switch off ignition.
- Renew solenoid valve -2-.

=> Repair group 20; Removing and installing parts of activated charcoal filter system Removing and installing parts of activated charcoal filter system

LED does not flash:

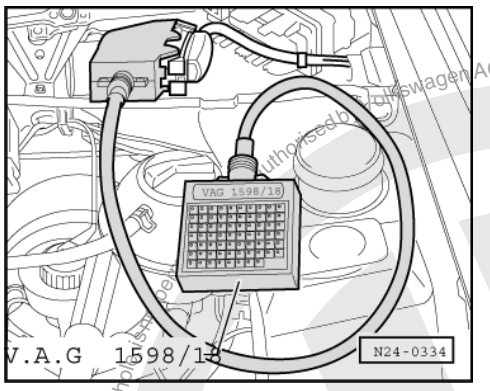

- Proceed with final control diagnosis until completed.
- Switch off ignition.
- -> Connect test box V.A.G 1598/18 to control unit wiring loom.
- Check wire for open circuit between test box sockets 3 and 2 pin connector contact 1, according to current flow diagram.
  Wire resistance: max. 1.5 ω
- Additionally check wire for short to battery positive and earth.
  Specification: ∞ω
- Check wire between 2 pin connector contact 2 and relay plate for open circuit using to current flow diagram.
  Wire resistance: max. 1.5 ω

If no wiring fault is detected:

- Renew engine control unit
  => Page 28 , item 28

3 - Measured value blocks

3.1 - Measured value blocks

3.2 - Read measured value block and basic settings

The measured values in the functions read measured value block and basic setting are described during the individual component test. This table serves only as an overview.

Note:

To change to another display group proceed as follows:

Protected by copyright. Copying for private or commercial purposes, in part or in whole, is not permitted unless authorised by Volkswagen AG. Volkswagen AG does not guarantee or accept any liability with respect to the correctness of information in this document. Copyright by Volkswagen AG.
satelettronica

Display group	V.A.G 1551	V.A.G 1552
Higher	Press key 3	Press ↑key
Lower	Press key 1	Press ↓key
Skip	Press key C	Press key C

3.3 - Display group overview

Display group 0 (decimal displayed value)												
Test conditions ▪ Engine runs at idling speed ▪ The coolant temperature is at least 80 °C ▪ The electrical consumers are switched off												
Display zones											Specification	Corresponds to
1	2	3	4	5	6	7	8	9	10	Engine speed	71...67	825...875 rpm1)
									Injection period		4...10	2.25...5.00 ms
								Throttle valve angle			23...42	10...18 <°
							Not relevant				---	---
						Not relevant					---	---
1	2	3	4	5	Lambda probe signal						0...20 123...195	0...0.1 0.6...0.95 V
				Intake manifold pressure							45...84	300...480 mbar
			Coolant temperature								37...19	80...105 °C
		Battery voltage									187...226	12.0...14.5 V
	Intake air temperature										156...44	15...70 °C

1) Up-to-date specifications:

=> Exhaust emissions test binder

	Display zones			
	1	2	3	4
Display group 1				
Display	xxxxrpm	xx.x °C	x.x V	xxxxxxxx
Indicated	Engine speed	Coolant temperature	Lambda probe voltage	Adjustment conditions4)
Specification1)	825...8752)3)	80...105	0.1...0.95 fluctuating	00000000
Display group 2				
Display	xxxx rpm	xx.xx ms	xx.x V	xx.x °C
Indicated	Engine speed	Injection period	Battery voltage	Intake air temperature
Specification1)	825...8752)3)	2.25...5.00	12.0...14.5 V	15...70
Display group 3				
Display	xxxx rpm	xxx %	xx <°	xx.x %
Indicated	Engine speed	Engine load	Throttle valve angle	Position of throttle valve by throttle valve positioner
Specification1)	825...8752)3)	45...84	9...18	17...29

	Display zones			
	1	2	3	4
Display group 4				
Display	xxxx rpm	xxx %	xxx	xxxxxxxx
Indicated	Engine speed	Engine load	Speed signal	Operating condition4)

Protected by copyright. Copying for private or commercial purposes, in part or in whole, is not permitted unless authorised by Volkswagen AG. Volkswagen AG does not guarantee or accept any liability with respect to the correctness of information in this document. Copyright by Volkswagen AG.

satelettronica

	Display zones			
Specification1)	825...8752)3)	45...84	255	01000000

1) The specifications must be attained when:

- engine runs at idling speed,

- the coolant temperature is at least 80 °C and

- electrical consumers are switched off

2) The control unit increases idling speed under following conditions:

- When the battery voltage is too low: up to 900 rpm

- After a long full throttle drive and higher temperatures: up to 960 rpm

3) Up-to-date specifications:

=> Exhaust emissions test binder

4) Significance of numbers in 8 digit number block => Page 17 .

	Display zones			
	1	2	3	4
Display group 5				
Display	xxxx rpm	xxx %		
Indicated	Engine speed	Duty cycle solenoid valve 1 for activated charcoal filter	---	---
Specification1)	825...8752)3)	6...19	---	---

1) The specifications must be attained when:

- engine runs at idling speed,

- the coolant temperature is at least 80 °C and

- electrical consumers are switched off

2) The control unit increases idling speed under following conditions:

- When the battery voltage is too low: up to 900 rpm

- After a long full throttle drive and higher temperatures: up to 960 rpm

3) Up-to-date specifications:

=> Exhaust emissions test binder

Significance of figures in 8 digit number block

Significance when displayed digit = 1									
x	x	x	x	x	x	x	x	Adjustment conditions (display group 1)	Operating condition (display group 4)
1								Not relevant	Overrun
	1							Not relevant	Idling speed
		1						Air conditioner compressor switched on	Part load
			1					Idling switch open1)	Full load
				1				Fault in the Lambda control2)	Not relevant
					1			Throttle valve opened	Not relevant

Protected by copyright. Copyright by Volkswagen AG. Copying for private or commercial purposes, in part or in whole, is not permitted unless authorised by Volkswagen AG. Volkswagen AG does not guarantee or accept any liability with respect to the correctness of information in this document.

satelettronica

Significance when displayed digit = 1									
						1		Speed above 2000 rpm	Not relevant
							1	Coolant temperature below 80 °C	Not relevant

1) The problem may be: e.g. the accelerator cable is set too tight.

2) Self-diagnosis will not register all faults. If a 1 is displayed even when no faults are stored, check Lambda probe and Lambda control =>Page 36 .

Protected by copyright. Copying for private or commercial purposes, in part or in whole, is not permitted unless authorised by Volkswagen AG. Volkswagen AG does not guarantee or accept any liability with respect to the correctness of information in this document. Copyright by Volkswagen AG.

satelettronica

24 - Mixture preparation, Injection

1 - Servicing injection system

1.1 - Servicing injection system

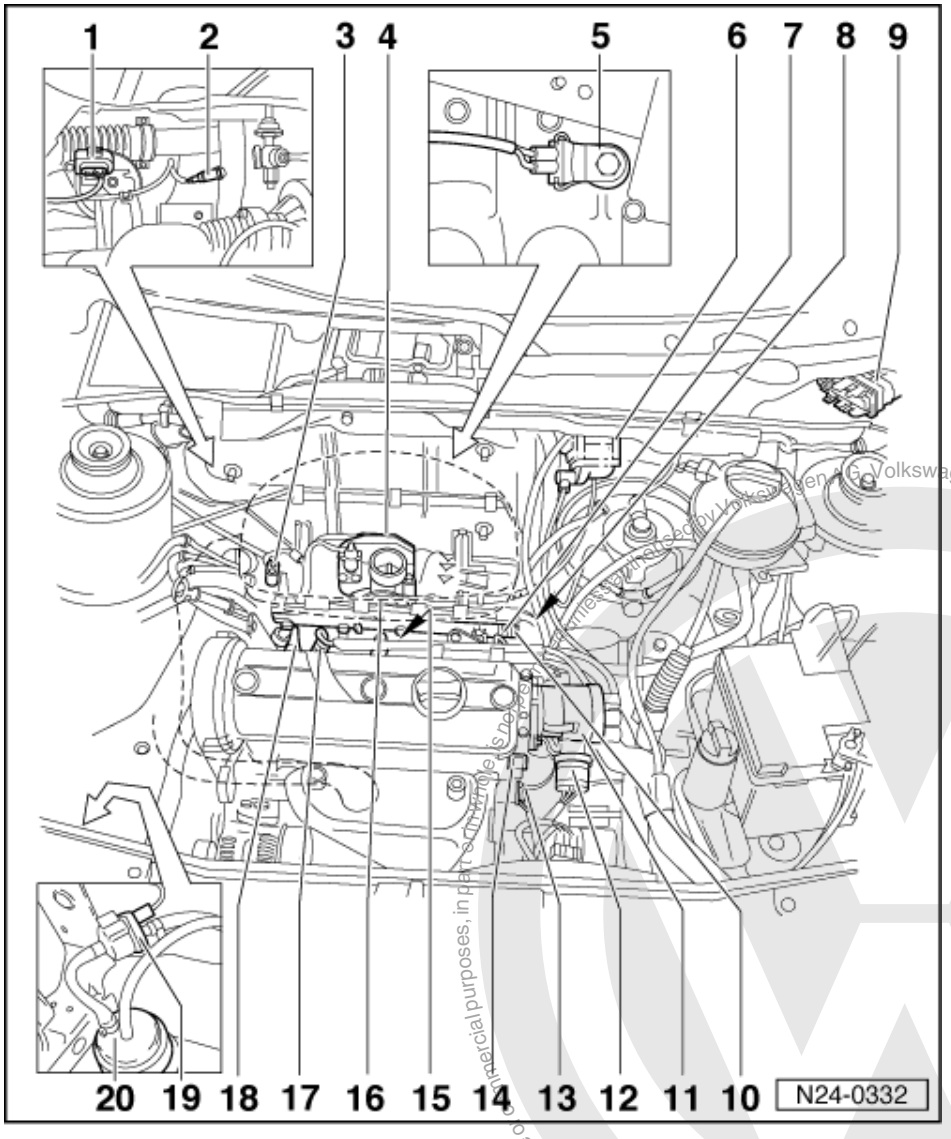

1.2 - Fitting locations overview

1 4 pin connector
- For Lambda probe (G39)

2 Lambda probe (G39), 55 Nm
- Location: In front exhaust pipe

3 Intake manifold pressure sender (G71) with intake air temperature sender (G42)

4 Throttle valve control part (J338)

5 Knock sensor 1 (G61)
- =>Page 74

satelettronica
Protected by copyright. Copying for private or commercial purposes, in part or entirely, is not permitted unless authorised by Volkswagen AG. Volkswagen AG does not guarantee or accept any liability with respect to the correctness of information in this document. Copyright by Volkswagen AG.

6 Ignition transformer (N152)
- =>Page 72

7 Fuel rail

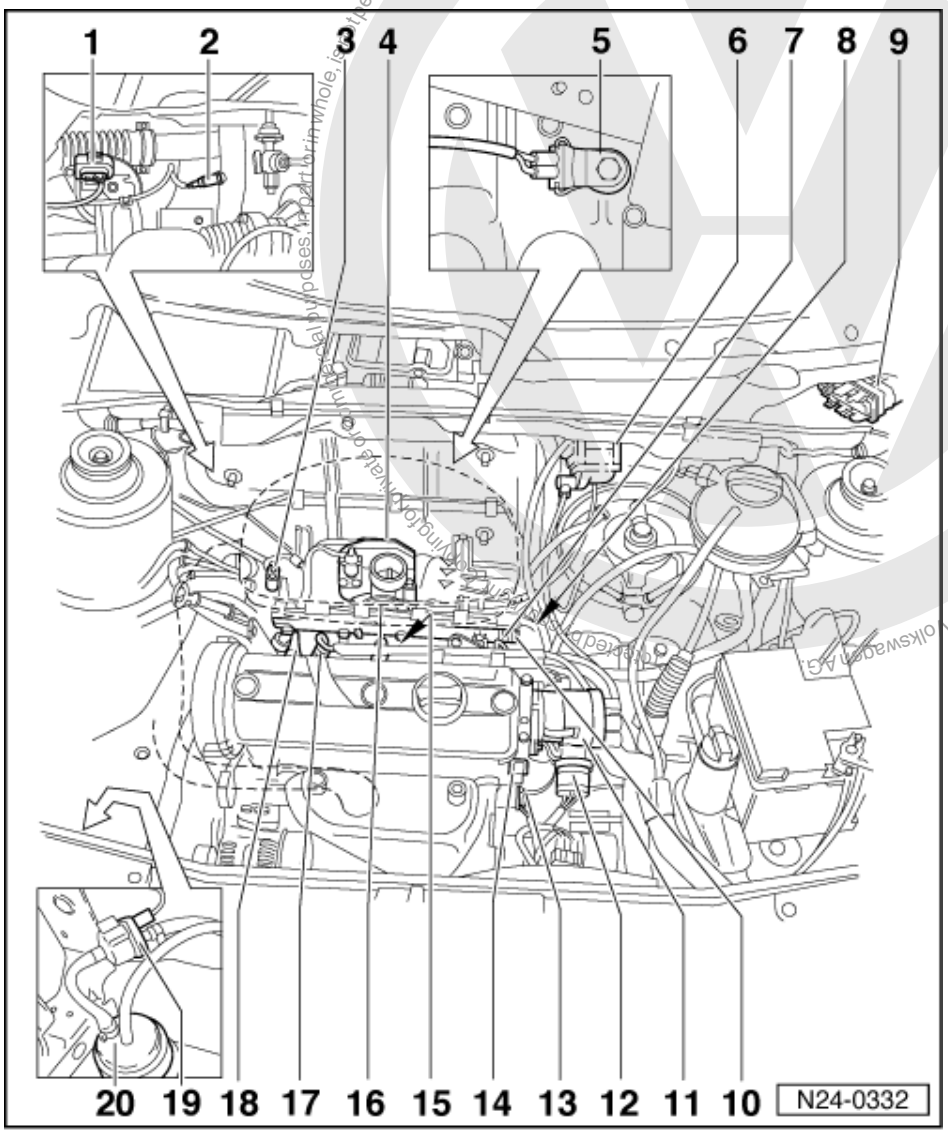

8 Earth connection

9 Engine control unit
(control unit for 1AV fuel injection and ignition system -J382)

10 Fuel pressure regulator

11 Distributor
- =>Page 73

12 Central connector

13 Earth connection

14 Coolant temperature sender (G62)
- Identification: yellow ring

15 Injector (N30...N33)

16 Air cleaner
- Removing => Page 34 , Fig. 3

17 Spark plug, 25 Nm

Volkswagen AG. Volkswagen AG does not guarantee or accept any liability with respect to the correctness of information in this document. Copyright by Volkswagen AG.
satelettronica

- =>Page 76

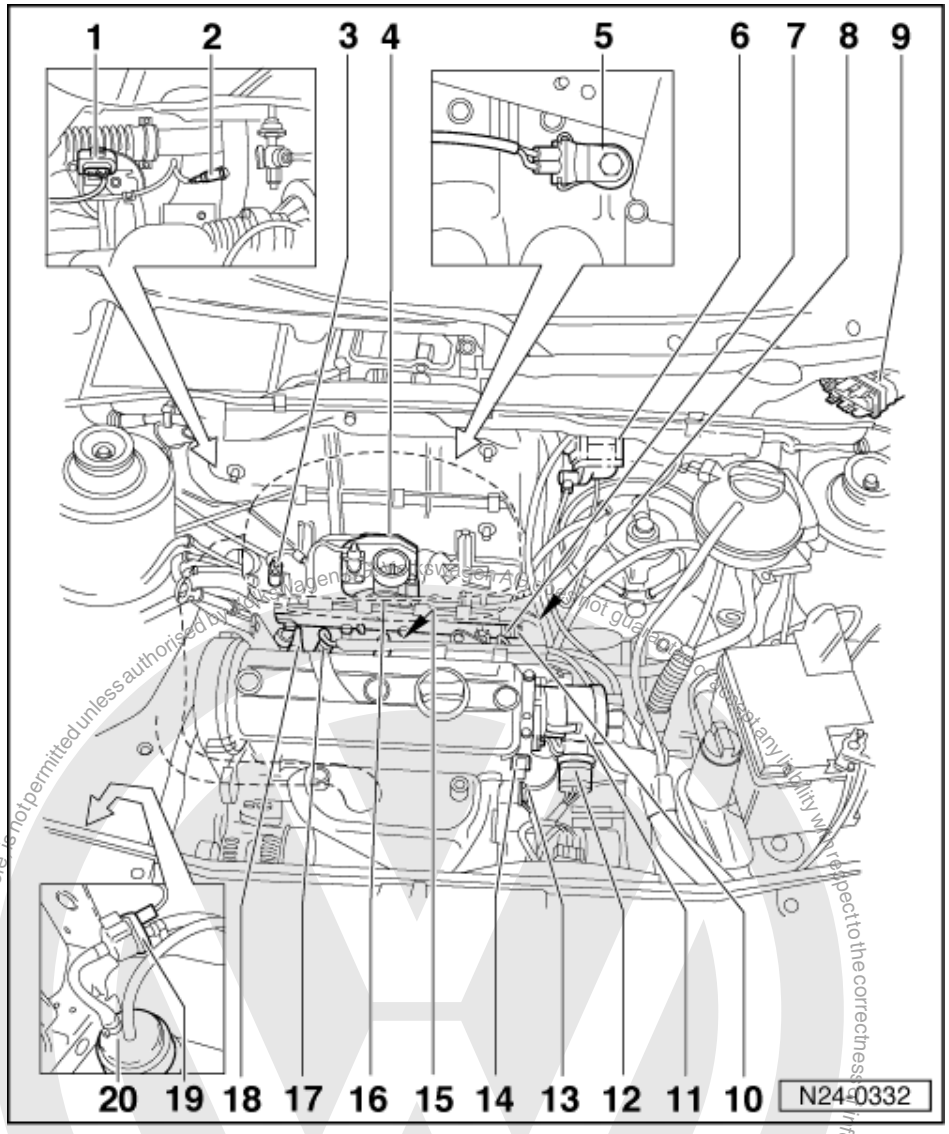

18 Oil pressure switch

19 Activated charcoal filter solenoid valve 1 (N80)

- Activated charcoal filter system

=> Repair group 20, removing and installing parts of the fuel supply system, removing and installing parts of the activated charcoal filter system

20 Activated charcoal filter

- In right-hand wheel housing
- Activated charcoal filter system

=> Repair group 20, removing and installing parts of the fuel supply system, removing and installing parts of the activated charcoal filter system

1.3 - General notes on injection

Servicing ignition part:

satelettronica

=> Repair group 28

Notes:

- The engine control unit is equipped with self-diagnosis. Before carrying out repairs and fault finding the fault memory must be interrogated. Also the vacuum hoses and connections must be checked (unmetered air).
- Components marked with * are checked via the self diagnosis
  => Page 6 , interrogating and erasing fault memory.
- Components marked with **can be checked with the final control diagnosis => Page 12 .
- Disconnecting and connecting the battery must only be done with the ignition switched off, otherwise the engine control unit could be damaged.
- For trouble-free operation of the electrical components a voltage of at least 11.5 V is necessary.
- If the engine starts, runs for a short period and then stops, after fault finding, repairs or component tests, then the fault may lie with the immobilizer which is blocking the engine control unit. The fault memory must be interrogated and if necessary the control unit matched => Page 65 .
- Do not use sealants containing silicone. Particles of silicone drawn into the engine, will not be burnt in the engine and damage the Lambda probe.
- During some checks it is possible that the control unit will recognise and store a fault. Therefore after completing all checks and repairs the fault memory must be interrogated and if necessary erased.
  => Page 6 , interrogating and erasing fault memory
- The "learnt" values will be erased if the control unit is disconnected from the current supply. Engine running problems may occur until the control unit has "relearnt" all values.
- Always renew spring-type hose clips with screw-type hose clips.

Safety precautions =>Page 35

Rules for cleanliness => Page 35

Technical data => Page 35

Checking intake system for leaks (unmetered air) => Page 60

Protected by copyright. Copying for private or commercial purposes, in part or in whole, is not permitted unless authorised by Volkswagen AG. Volkswagen AG does not guarantee or accept any liability with respect to the correctness of information in this document. Copyright by Volkswagen AG.

satelettronica

1.4 - Removing and installing parts of the injection system

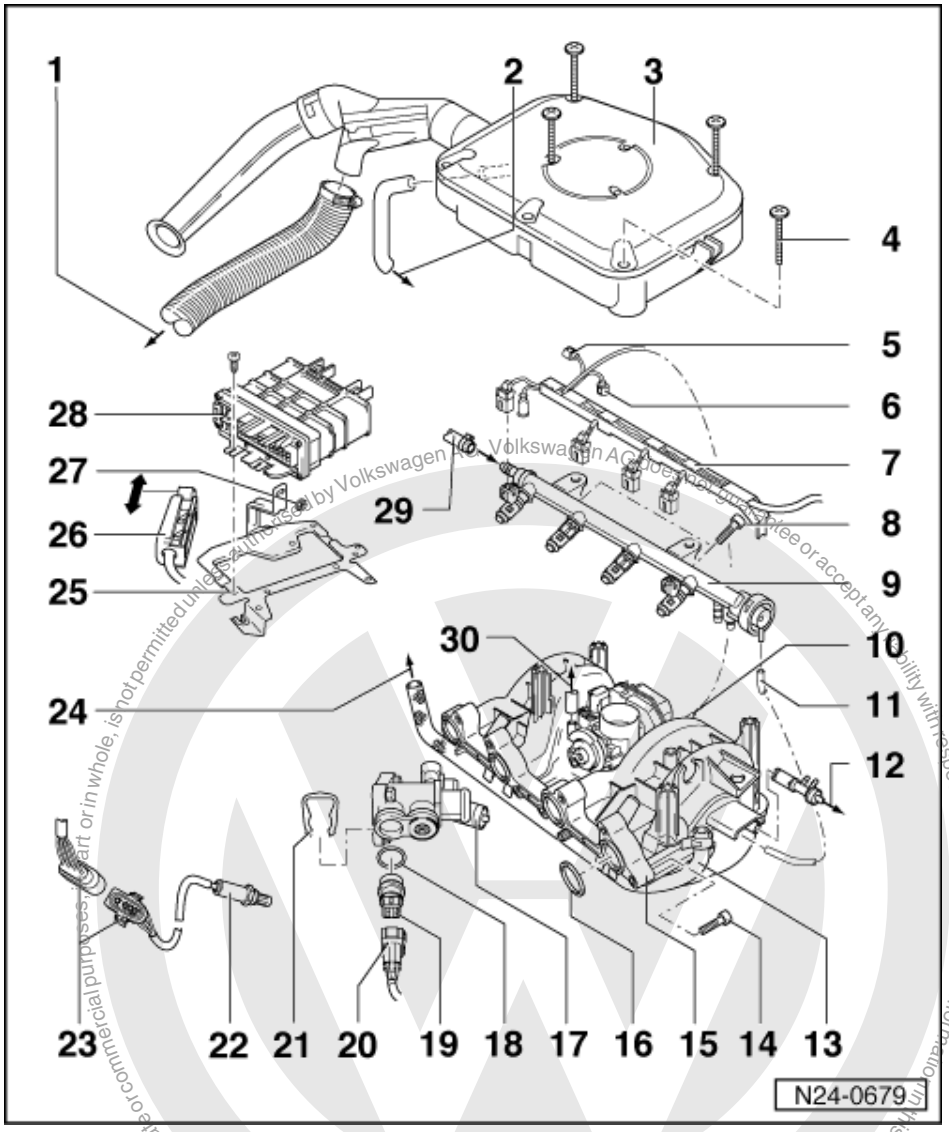

1 To warm air intake
- To warm air collecting plate on exhaust manifold

2 To oil separator

3 Air cleaner
- Removing => Page 34 , Fig. 3
- Dismantling and assembling => Page 32

4 Screw

Note:

Loosening and tightening the screws -4- with a power screwdriver is only permitted if:

- The power tool speed is max. 200 rpm
- The tightening torque is set to max. 3 Nm

satelettronica

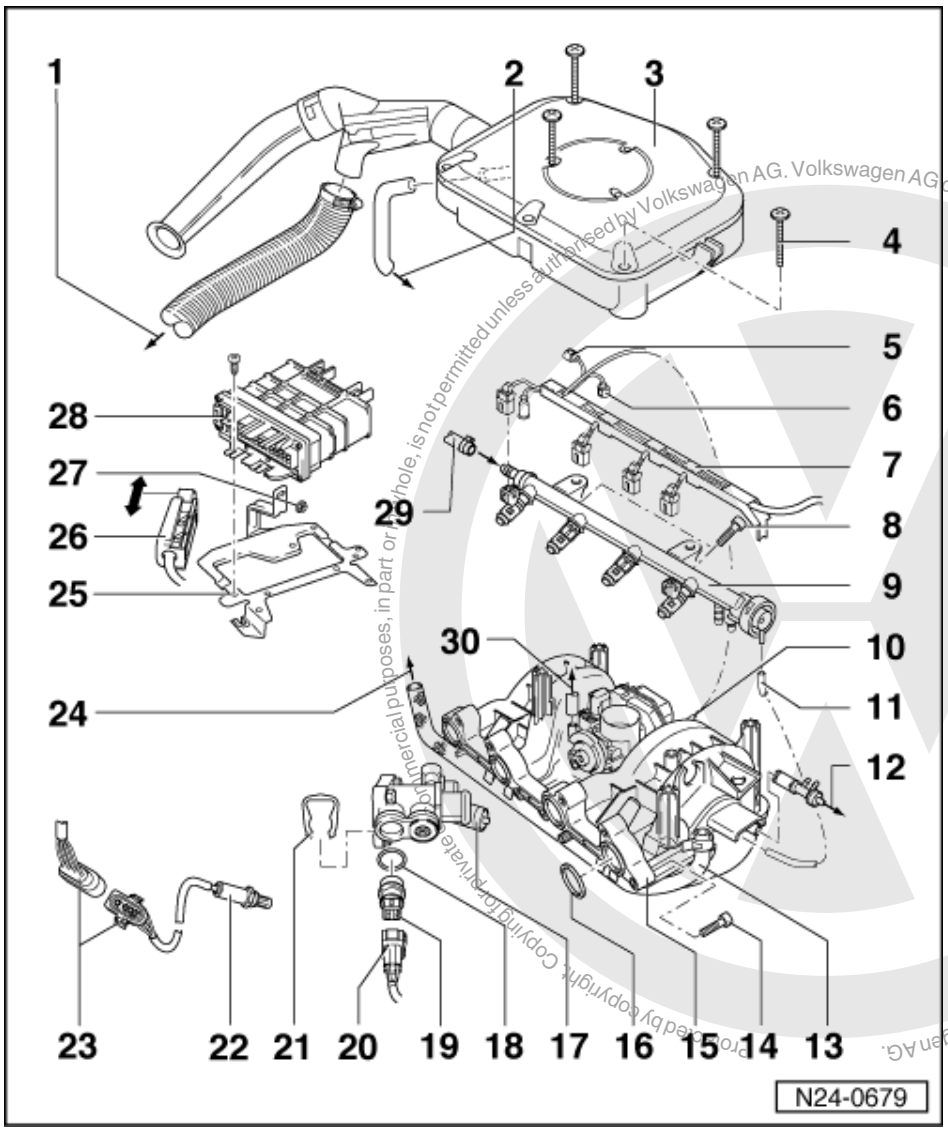

5 Connector
- 4-pin
- For intake manifold pressure sender (G71) with intake air temperature sender (G42)

6 Connector
- 8 pin
- For throttle valve control part (J338)

7 Cable guide
- Clipped on fuel manifold

8 10 Nm

9 Fuel rail with injectors
- Dismantling and assembling => Page 29

10 Earth wire
- For throttle valve control part

11 Vacuum hose

Copyright by Volkswagen AG. Volkswagen AG does not guarantee or accept any liability with respect to the correctness of information in this document. Copyright by Volkswagen AG. Protected by copyright. Copying for private or commercial purposes, in part or in whole, is not permitted unless authorised by Volkswagen AG.
satelettronica

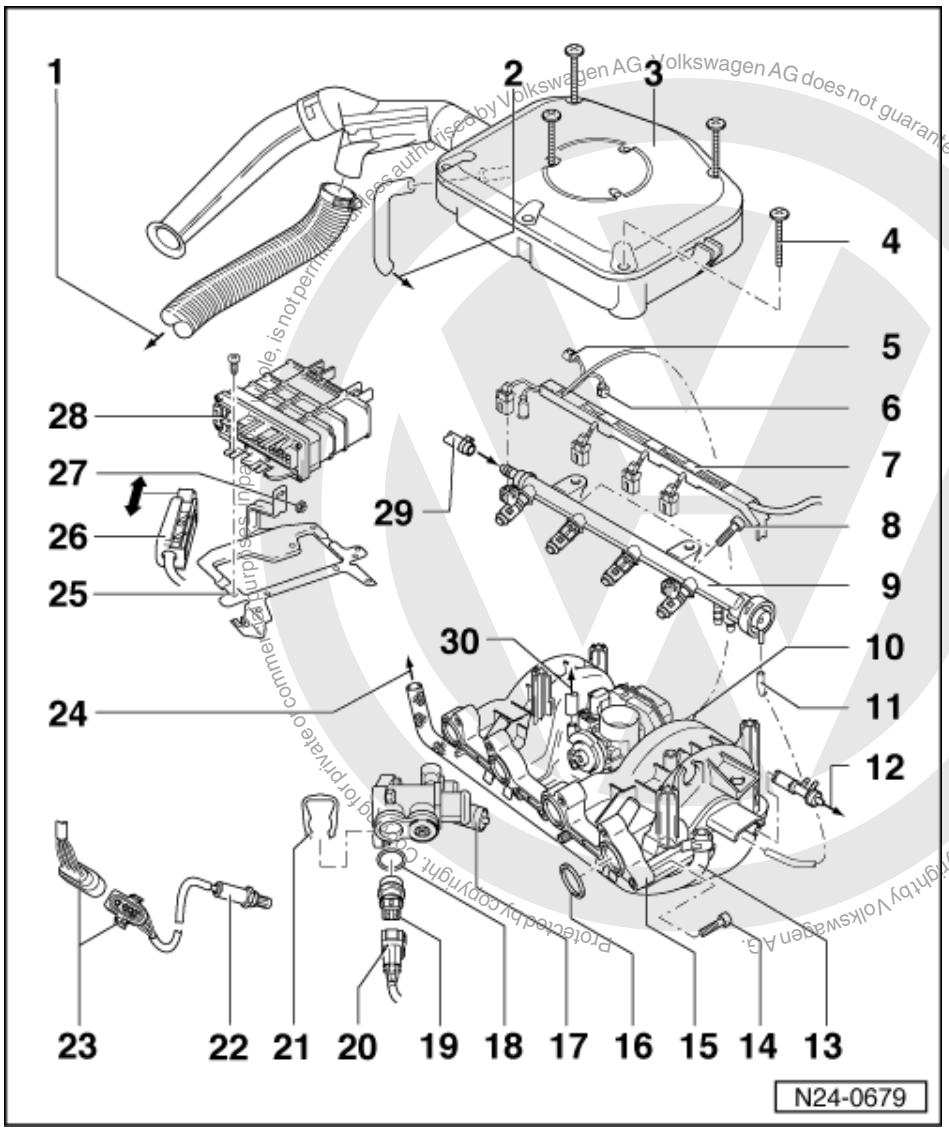

12 To brake servo

13 Return hose

- Secure with spring-type clips on fuel manifold
- Blue or blue markings

14 20+1 Nm

- Tighten bolts from inside to outside
- Ensure tightening torque is correct, otherwise the intake manifold bushes will work into the cylinder head

15 Intake manifold

- Dismantling and assembling => Page 30

16 O ring

- Renew

17 Thermostat housing

18 O ring

- Renew if damaged

satelettronica

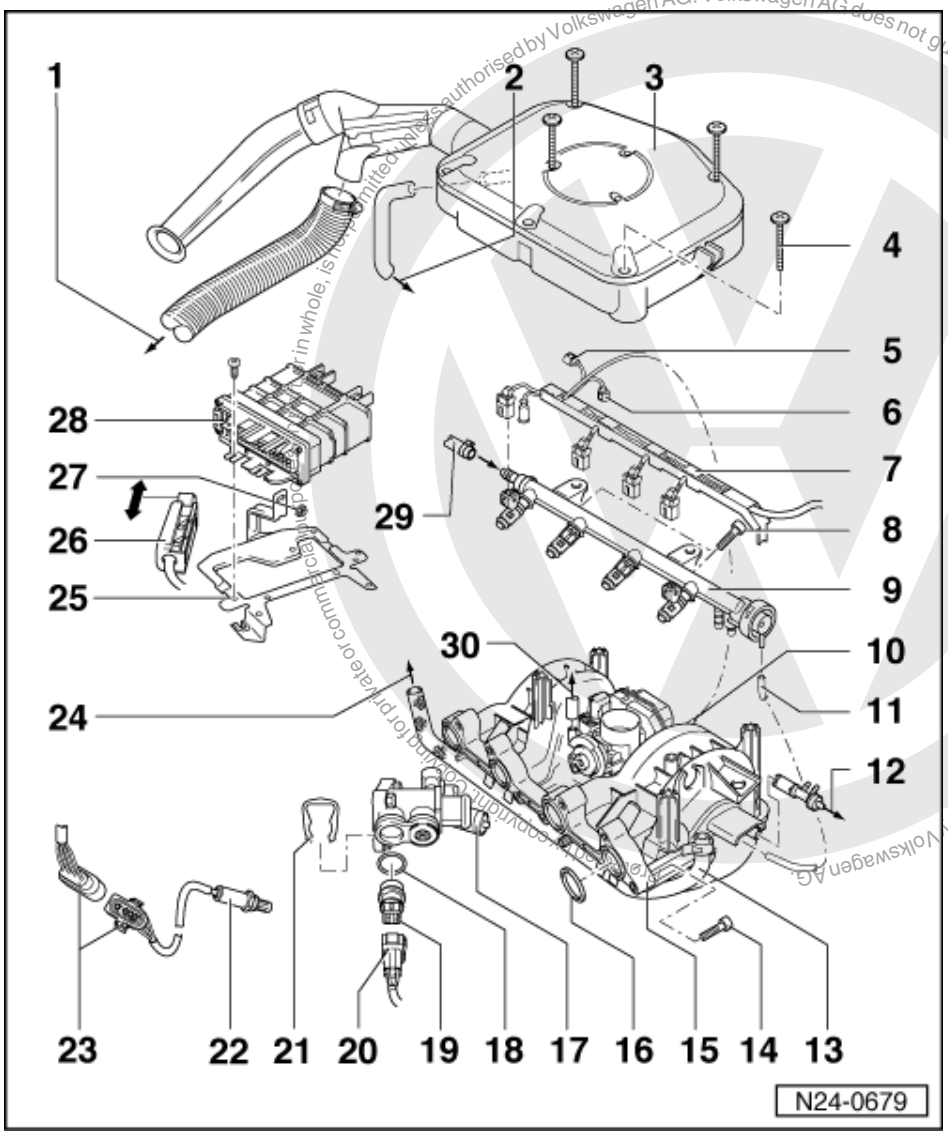

19 Coolant temperature sender (G62)*

- With coolant temperature gauge sender (G2)
- Identification: yellow ring
- If necessary release pressure in cooling system before removing
- Checking =>Page 49
- Resistance graph
  =>Page 34 , Fig. 1

20 Connector

21 Retaining clip

22 Lambda probe (G39)*, 55 Nm

- Location: In front exhaust pipe
- Grease only the threads with "G5"; "G5" must not get into the slots on the probe body
- Checking Lambda probe and Lambda control
  => Page 36

Copyright by Volkswagen AG. Volkswagen AG does not guarantee or accept any liability with respect to the correctness of information in this document. Copyright by Volkswagen AG. Reproduction, copying or publication in whole, is not permitted unless authorised by Volkswagen AG.
satelettronica

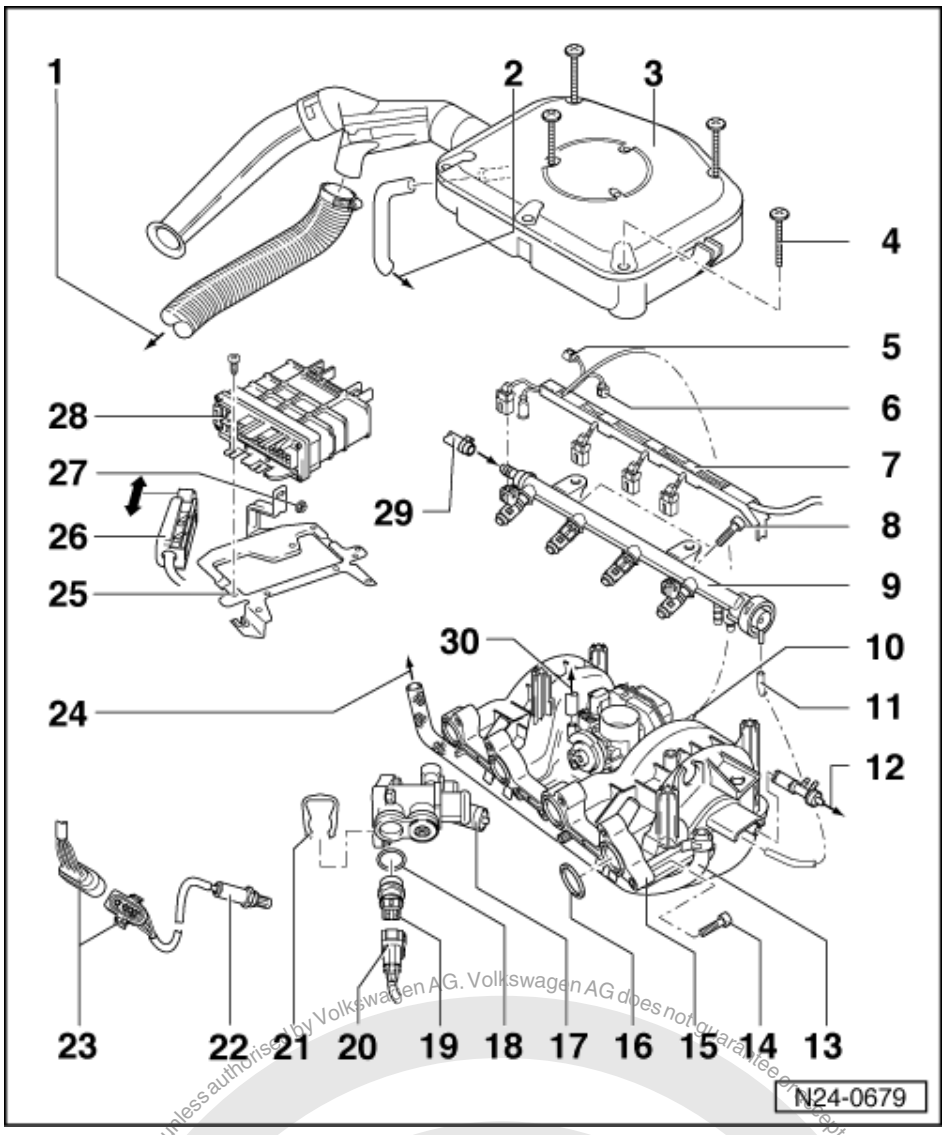

- Checking probe heating voltage supply => Page 38
- Check probe heating for continuity

23 4-pin connector
- For Lambda probe and Lambda probe heating
- Secured to rear engine mounting on right, in direction of travel

24 To fuel tank

25 Securing plate

26 Connector
- Only disconnect or connect with ignition switched off

27 10 Nm

Protected by copyright. Copying for private or commercial purposes, in part or in whole, is not permitted unless authorised by Volkswagen AG. Volkswagen AG does not guarantee or accept any liability with respect to the correctness of information in this document. Copyright by Volkswagen AG.

satelettronica

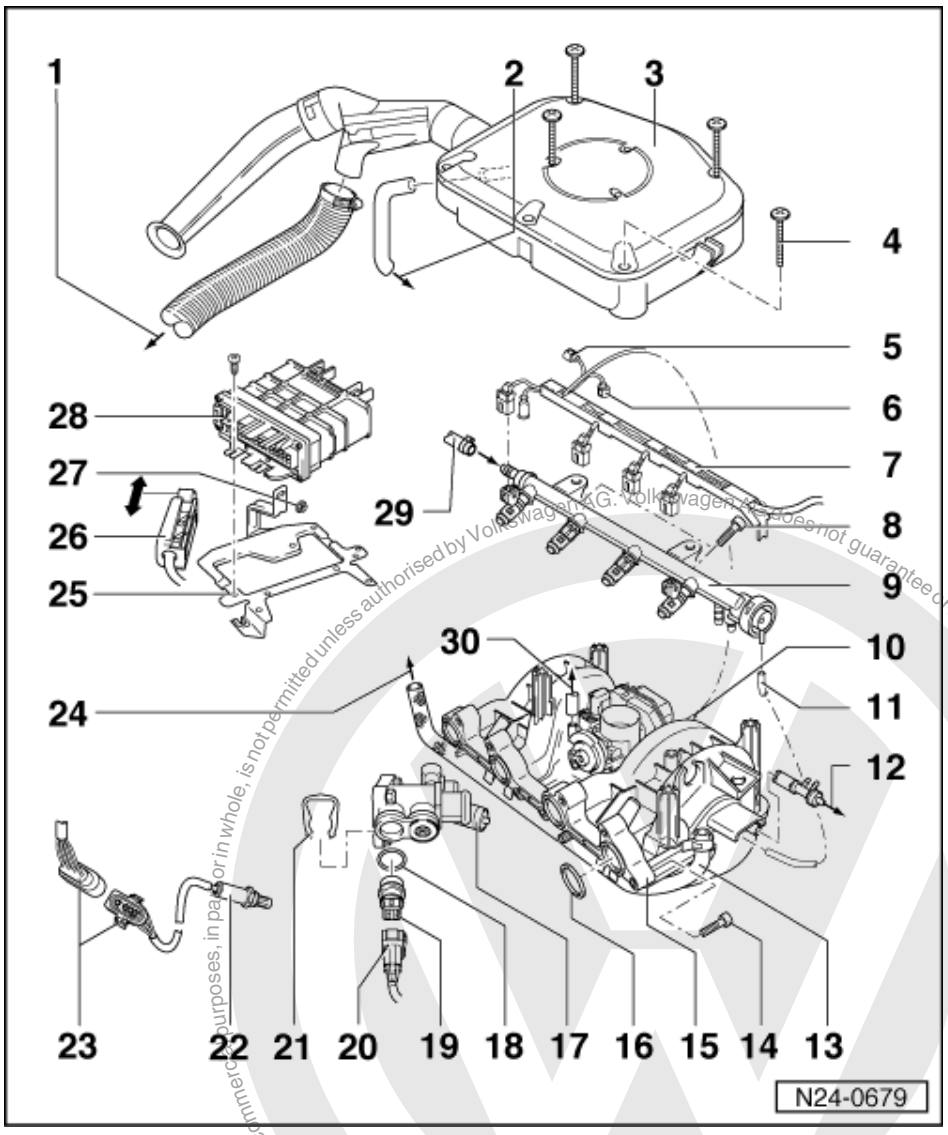

28 Engine control unit*

(control unit for 1AV fuel injection and ignition system -J382)

- For injection system, Lambda regulation, activated charcoal filter solenoid valve, knock control, governed speed, ignition and self-diagnosis
- Location: in plenum chamber, left
- Renew => Page 63
- Checking voltage supply => Page 66

29 Supply hose

- Secure with spring-type clips on fuel manifold
- Black or white markings

30 To activated charcoal filter solenoid valve 1 (N80)

- Activated charcoal filter system

=> Repair group 20, removing and installing parts of the fuel supply system, removing and installing parts of the activated charcoal filter system

Copyright by Volkswagen AG. Volkswagen AG does not guarantee or accept any liability with respect to the correctness of information in this document. Copyright by Volkswagen AG. Protected by copyright. Copying for private or commercial purposes, in part or in whole, is not permitted unless authorised by Volkswagen AG.
satelettronica

1.5 - Dismantling and assembling fuel rail with injectors

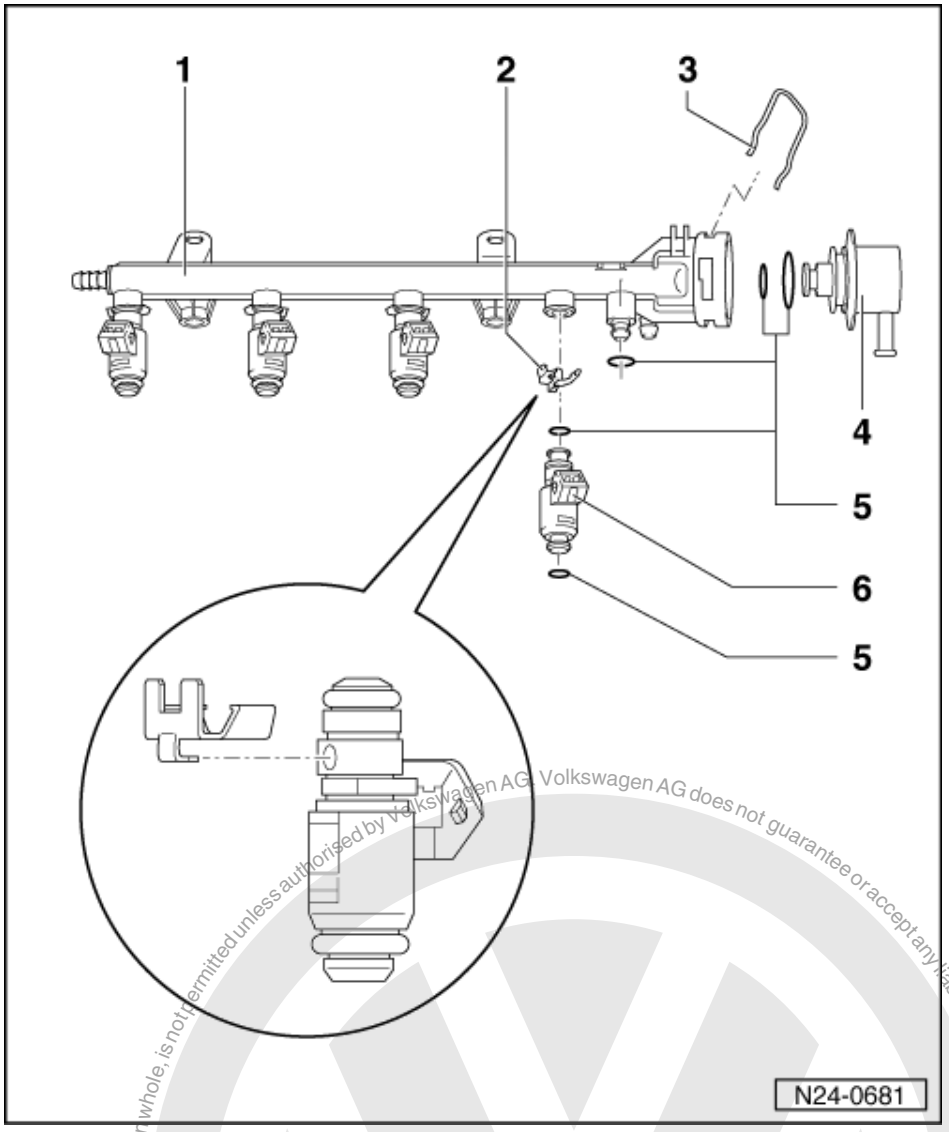

1 Fuel manifold

2 Retaining clip
- Ensure seated correctly at injector and fuel rail

3 Retaining clip

4 Fuel pressure regulator
- Checking fuel pressure regulator and holding pressure => Page 57

5 O ring
- Renew if damaged

6 Injectors (N30...N33)*
- Checking => Page 55
- Resistance 14...17 ω

Protected by copyright. Copying for private or commercial purposes, in part or in whole, is not permitted unless authorised by Volkswagen AG. Volkswagen AG does not guarantee or accept any liability with respect to the correctness of information in this document. Copyright by Volkswagen AG.

satelettronica

1.6 - Dismantling and assembling intake manifold

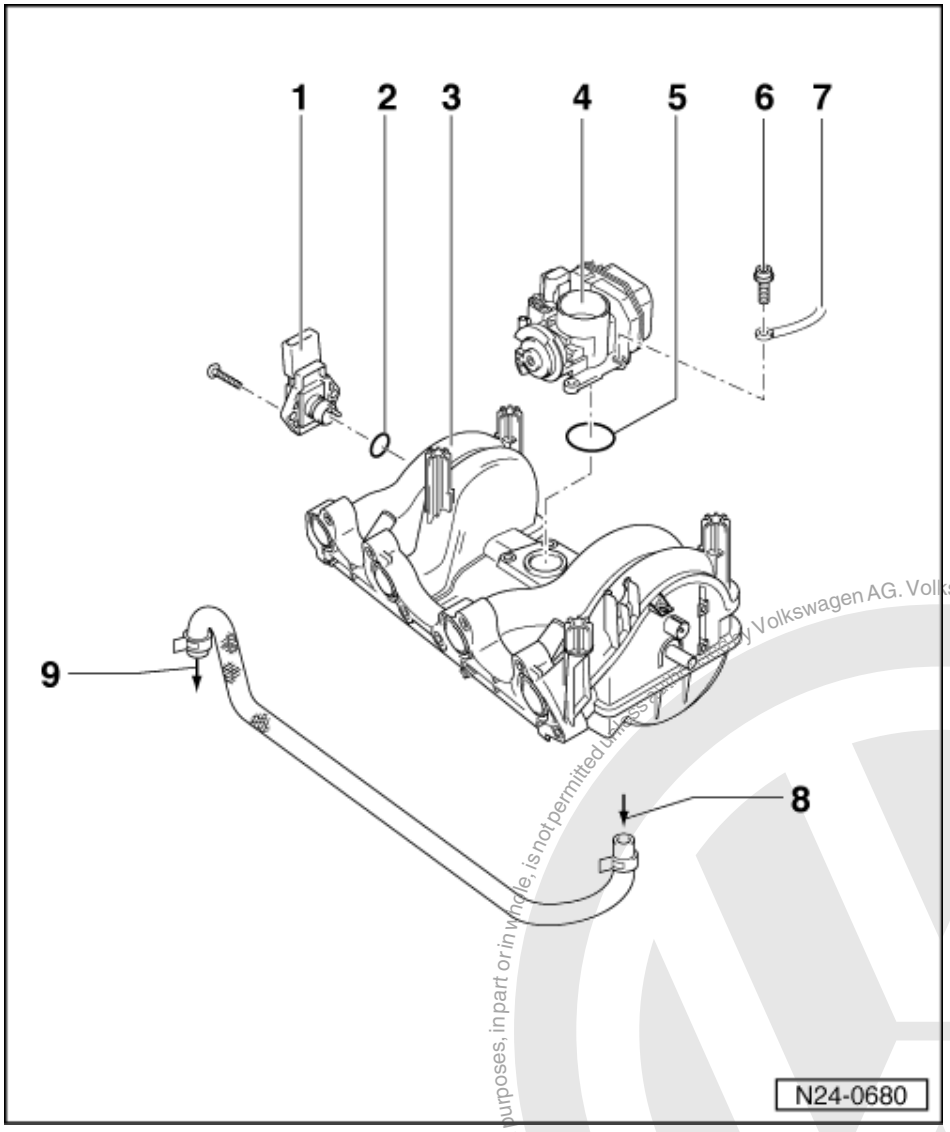

1 Intake manifold pressure sender (G71)* with intake air temperature sender (G42)*
- Resistance values for intake air temperature sender
  =>Page 34 , Fig. 2

2 O ring
- Renew if damaged

3 Intake manifold

4 Throttle valve control part (J338)*
- Checking => Page 41
- Components of the throttle valve control part (J338):
  Throttle valve positioner (V60), throttle valve potentiometer (G88), throttle valve potentiometer (G69) and idling switch (F60)

Protected by copyright. Copying for private or commercial purposes, in part or in whole, is not permitted unless authorised by Volkswagen AG. Volkswagen AG does not guarantee or accept any liability with respect to the correctness of information in this document. Copyright by Volkswagen AG.
satelettronica

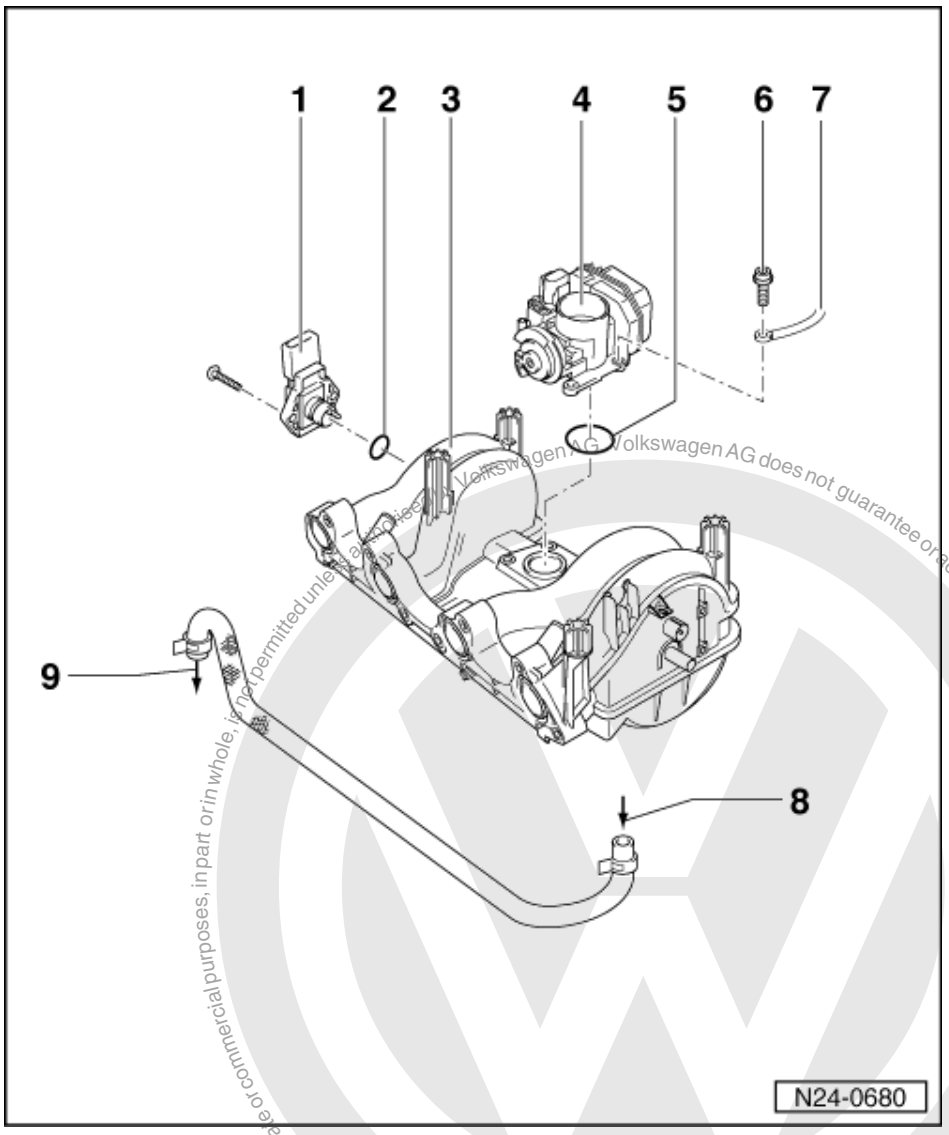

If the control unit is replaced:
- Perform basic settings => Page 64

5 O ring
- Renew if damaged

6 10 Nm

7 Earth wire
- For throttle valve control part

8 From fuel rail

9 To fuel tank

Protected by copyright. Copyright by Volkswagen AG.
Volkswagen AG does not guarantee or accept any liability with respect to the correctness of information in this document. Copyright by Volkswagen AG.
Copyright by Volkswagen AG. All rights reserved. Distribution or reproduction is not permitted unless authorized by Volkswagen AG for commercial purposes, in part or in whole, is not permitted unless authorized by Volkswagen AG.
satelettronica

1.7 - Dismantling and assembling air cleaner

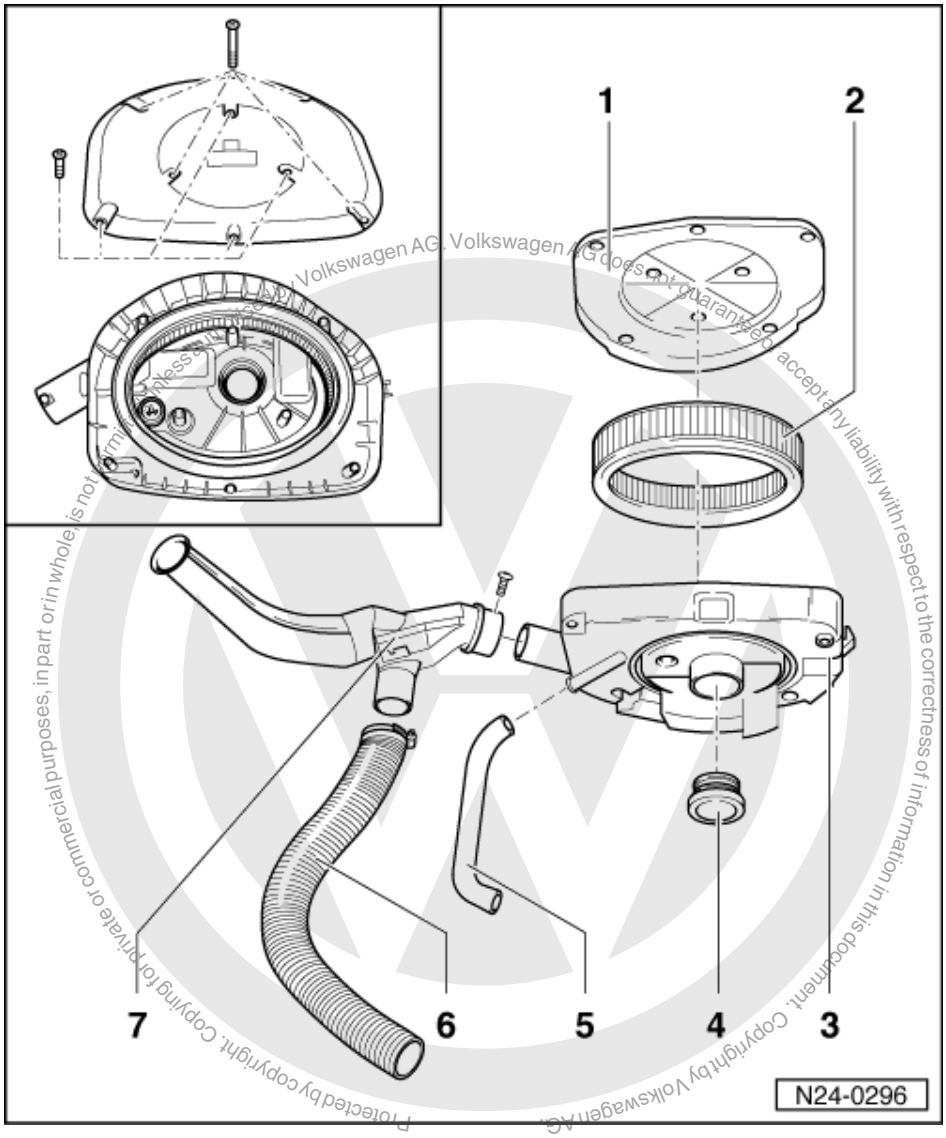

Protected by copyright. Copying for private or commercial purposes, in part or in whole, is not permitted unless authorised by Volkswagen AG. Volkswagen AG does not guarantee or accept any liability with respect to the correctness of information in this document. Copyright by Volkswagen AG.

satelettronica

Removing air cleaner => Page 34 , Fig. 3

1 Air cleaner cover

Note:

If the cover screws are loosened or tightened with a power tool the lower part of the thread can be damaged. Therefore the use of a power tool is only permissible when:

- The power tool speed is max. 200 rpm
- The tightening torque is set to max. 3 Nm

2 Filter element
3 Air cleaner lower part

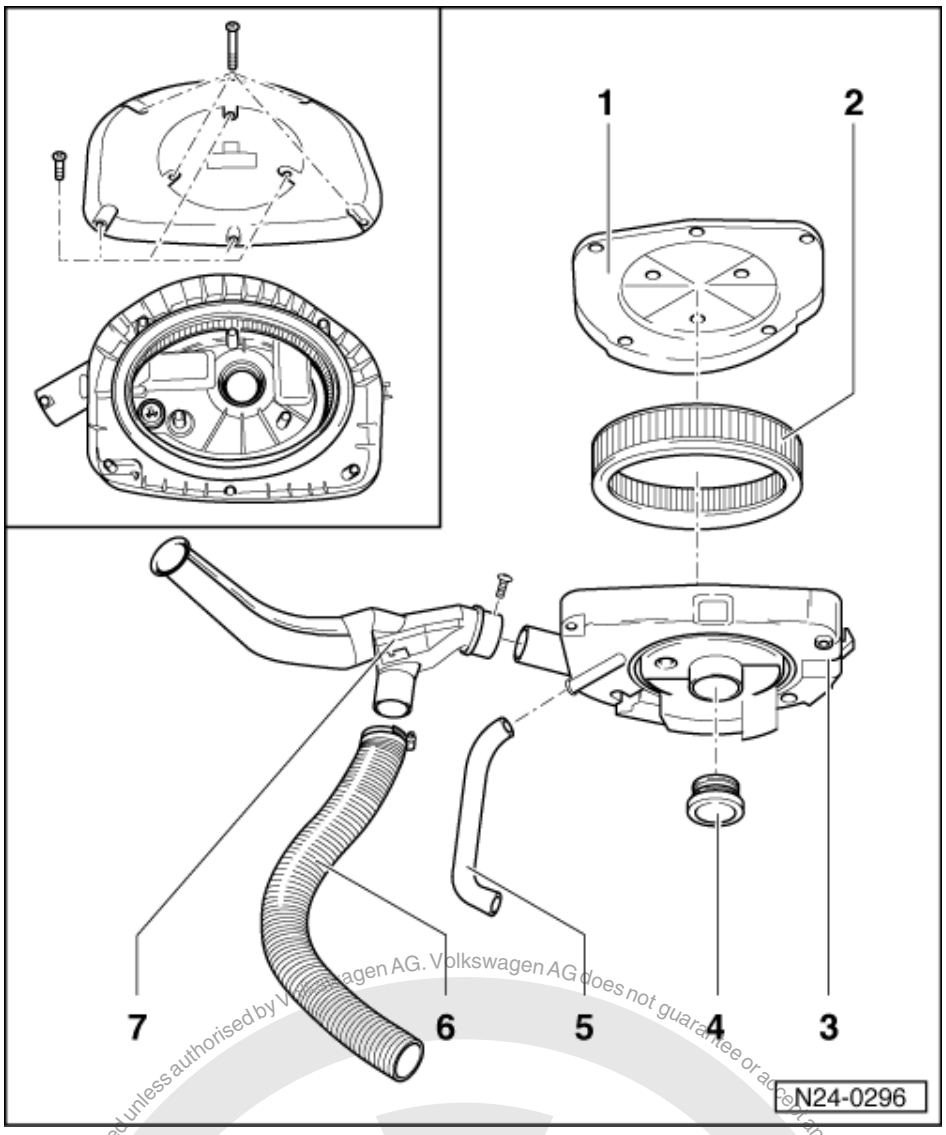

4 Gasket
- Renew if damaged

5 Crankcase breather hose

6 Warm air intake

7 Air intake housing with regulating flap
- Check intake air preheating => Page 60

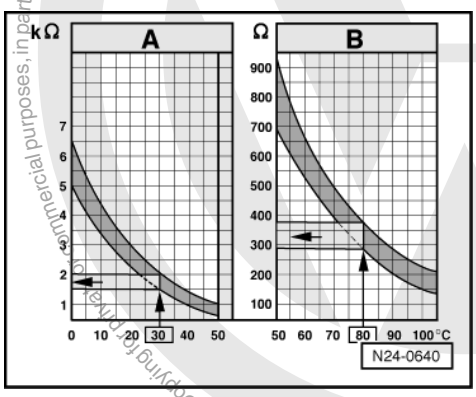

satelettronica

Protected by copyright. Copying for commercial purposes, in part or in whole, is not permitted unless authorised by Volkswagen AG. Volkswagen AG does not guarantee or accept any liability with respect to the correctness of information in this document. Copyright by Volkswagen AG.

-> Fig. 1 Resistance values for coolant temperature sender (G62)

The diagram is divided into two temperature ranges:

A - From 0...50 °C
B - From 50...105 °C

Examples:

- 30 °C is in range A and corresponds to a resistance of 1.5...2.0 kω
- 80 °C is in range B and corresponds to a resistance of 275...375 ω

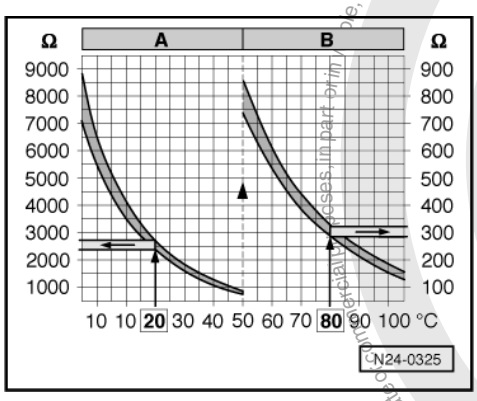

-> Fig.2 Resistance values for intake air temperature sender (G42)

Examples:

- 20 °C corresponds to a resistance from 2340...2680 ω
- 80 °C corresponds to a resistance from 290...330 ω

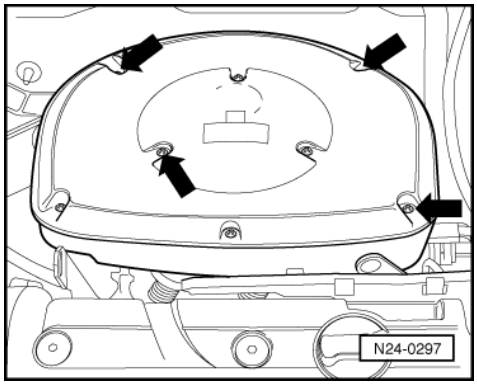

-> Fig. 3 Removing air cleaner

- Loosen air cleaner at securing screws marked by arrows.

Note:

If the securing screws are loosened or tightened with a power tool the thread in the intake pipe can be damaged. Therefore the use of a power tool is only permissible when:

- The power tool speed is max. 200 rpm
- The tightening torque is set to max. 3 Nm

Copyright by Volkswagen AG. Volkswagen AG does not guarantee or accept any liability with respect to the correctness of information in this document. Copyright by Volkswagen AG. Protected by copyright. Copying for private or commercial purposes, in part or in whole, is not permitted unless authorised by Volkswagen AG.

satelettronica

1.8 - Safety precautions

Warning!
Fuel system is under pressure! Before opening the system place a cloth around the connection. Then release pressure by carefully loosening the connection.

To prevent injuries to persons and/or damage to the fuel injection and ignition system, the following must be noted:

- Do not touch or disconnect ignition wiring when the engine is running or being turned at starter speed.
- The ignition must be switched off before connecting or disconnecting injection or ignition system wiring or tester cables.
- If the engine is to be turned at starter speed, without starting, e.g. when checking compressions, pull plug off Hall sender (distributor).

Observe following if test and measuring instruments are required during a test drive:

- Test and measuring instruments must be secured to rear seat and operated by a 2nd person from this location.

  If test and measuring instruments are operated from front passenger's seat and the vehicle is involved in an accident, there is a possibility that the person sitting in this seat may receive serious injuries when the airbag is triggered.

1.9 - Rules for cleanliness

When working on the fuel supply/injection system, pay careful attention to the following "5 rules":

- Thoroughly clean all unions and the adjacent areas before disconnecting.
- Place parts that have been removed on a clean surface and cover. Do not use fluffy cloths!
- Carefully cover opened components or seal, if the repair cannot be carried out immediately.
- Only install clean components:
  Only unpack replacement parts immediately prior to installation.
  Do not use parts that have been stored loose (e.g. in tool boxes etc.).
- When the system is open:
  Do not work with compressed air if this can be avoided.
  Do not move vehicle unless absolutely necessary.

1.10 - Technical data

Engine code		AEE, ALM
Idling speed	rpm	825...8751)2)
Engine control unit3)		

Protected by copyright. Copying for private or commercial purposes, in any form and by any means, is not permitted unless authorised by Volkswagen AG. Volkswagen AG does not guarantee or accept any liability with respect to the correctness of information in this document. Copyright by Volkswagen AG.
satelettronica

Engine code Control unit version	AEE, ALM 1AV

1) Up-to-date specifications:

=> Exhaust emissions test binder

2) The control unit increases idling speed under following conditions:

- When the battery voltage is too low: up to 900 rpm

- After a long full throttle drive and at higher temperatures: up to 960 rpm

- When air conditioner is switched on: to approx. 900 rpm

3) If replaced carry out basic setting => Page 64

2 - Check components and functions

2.1 - Check components and functions

2.2 - Checking Lambda probe and Lambda control

Protected by copyright. Copying for private or commercial purposes, in part or in whole, is not permitted unless authorised by Volkswagen AG. Volkswagen AG does not guarantee or accept any liability with respect to the correctness of information in this document. Copyright by Volkswagen AG.

satelettronica

Special tools, testers, measuring instruments and auxiliary items required

- Fault reader V.A.G 1551 or vehicle system tester V.A.G 1552 with cable V.A.G 1551/3
- Test box V.A.G 1598/18
- Hand multimeter V.A.G 1526 or multimeter V.A.G 1715
- Adapter set V.A.G 1594
- Current flow diagram

Check conditions

- Basic setting OK.
- Exhaust system between cylinder head and catalyst free of leaks

Test sequence

- Connect fault reader V.A.G 1551 (V.A.G 1552). Start engine and select "Address word" 01 of engine control unit. When doing this the engine must be running at idling speed.
  (Connecting fault reader and selecting engine control unit => Page 2 .)

-> Indicated on display:

```
Rapid data transfer      HELP
Select function XX
```

- Press keys 0 and 8 for the function "Read measured value block" and confirm entry with Q key.

-> Indicated on display:

```
Read measured value block      HELP
Input display group number XXX
```

- Press keys 0, 0 and 1 for "Display group number 1" and confirm entry with Q key.

-> Indicated on display:

(1...4 = Display zones)

```
Read measured value block      1
     1     2     3     4
```

Only continue with the test when

- The coolant temperature is above 80 °C
  -Display zone 2-
- The engine has then run for a further 2 minutes at idling speed

- Note Lambda probe voltage in display zone 3. The voltage must
  fluctuate at least 30 times per minute
  in range of
  0... 1.0 V.

If the voltage change is slower, determine cause of fault. => Page 38 .

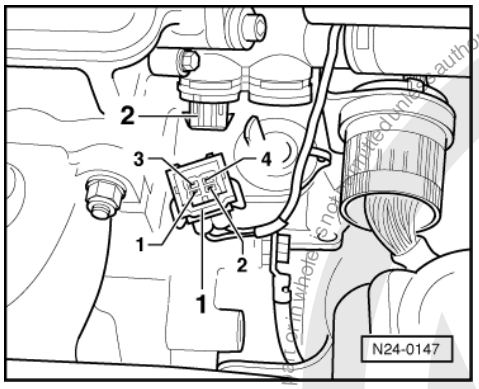

- -> Pull connector -1- off coolant temperature sender (G62) -2-. The probe voltage must
  increase
  and then decrease back to the old control range.
- Reconnect connector. The probe voltage must
  decrease
  and then increase to the old control range.

Note:

The throttle valve must not be operated during the check, otherwise the connector disconnected from the control unit will be recognised as a fault.

- Press ⇒ key.

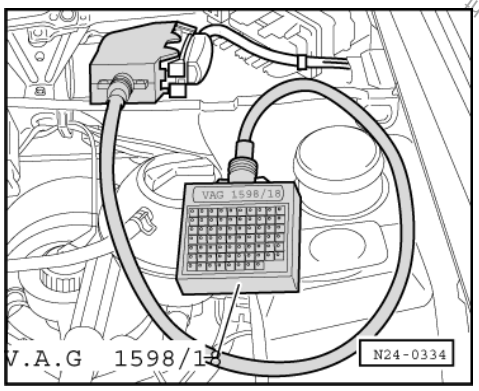

- Press keys 0 and 6 for the function "End output" and confirm entry with the Q key.
- Switch off ignition

If no control is detected:

- Check Lambda probe heating => Page 38 .

satelettronica

- -> Connect test box V.A.G 1598/18 to control unit wiring loom.

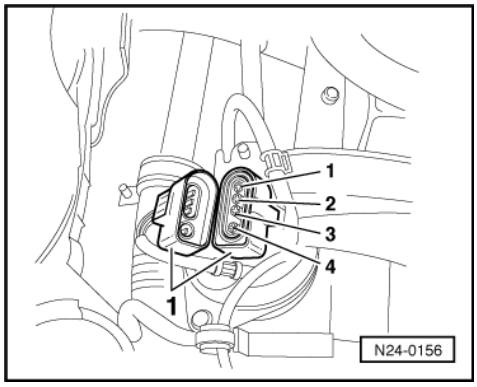

- -> Separate 4 pin connector to Lambda probe (G39) -1-.
- Check wiring between test box and connector for open circuit according to current flow diagram.
  Contact 3+socket 15
  Contact 4+socket 38
  Wire resistance: Max. 1.5 ω
- Check wiring at connector contacts 3+4 for short circuit to contacts 1+2 according to current flow diagram.
  Specification: ∞ω

If no wiring fault is detected:

- Renew Lambda probe (G39) =>Page 26 , item 22 .

Possible causes of fault if probe control frequency is too slow:

- The slots or holes in probe body are blocked
- The probe vent hole in area of connecting wire is blocked
- The probe has been overheated (glazed)
- The probe has been damaged by leaded fuel

2.3 - Checking Lambda probe heating

Special tools, testers, measuring instruments and auxiliary items required

- Test box V.A.G 1598/18
- Hand multimeter V.A.G 1526 or multimeter V.A.G 1715
- Adapter set V.A.G 1594
- Current flow diagram

Test conditions

- Fuel pump relay must be OK
- Fuse 18 must be OK.

Checking voltage supply

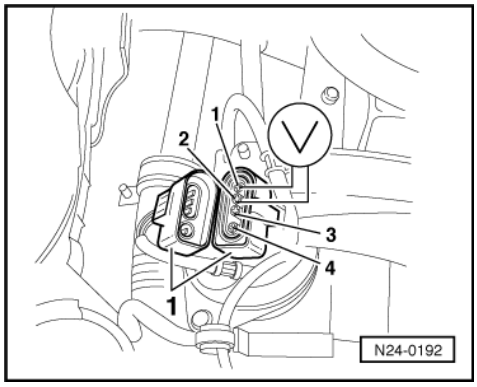

Protected by copyright. Copyright by Volkswagen AG. Volkswagen AG does not guarantee or accept any liability with respect to the correctness of information in this document. Copyright by Volkswagen AG. Reproduction in whole or in parts is prohibited without the prior written consent of Volkswagen AG. Unauthorised reproduction, distribution and publication is not permitted.
satelettronica

- -> Separate 4 pin connector to Lambda probe (G39) -1-.
- Connect multimeter using adapter cable from V.A.G 1594 to measure voltage on connector contacts 1+2.
- Start engine and measure voltage.
  Specification: at least 11 V
- Switch off ignition.

If no voltage is present:

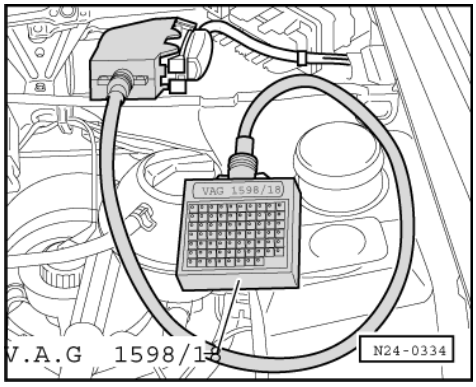

- -> Connect test box V.A.G 1598/18 to control unit wiring loom.
- Switch on ignition.
- Bridge test box sockets 1+25 with aux. cables from V.A.G 1594. The fuel pump must run.
- Observe display on multimeter.
  Specification: min. 11 V

If the specification is not obtained:

- Check wiring connections according to relay plate according to current flow diagram.

2.4 - Checking engine operating mode

Note:

Check whether engine control unit recognises the engine operating modes (idling speed, part throttle, full throttle, overrun).

Special tools, testers, measuring instruments and auxiliary items required

- Fault reader V.A.G 1551 or vehicle system tester V.A.G 1552 with cable V.A.G 1551/3

Test conditions

- Coolant temperature at least 80 °C

Test sequence

- Connect fault reader V.A.G 1551 (V.A.G 1552). Start engine and select "Address word" 01 of engine control unit. When doing this the engine must be running at idling speed.
  (Connecting fault reader and selecting engine control unit => Page 2 .)

-> Indicated on display:

```
Rapid data transfer      HELP
Select function XX
```

- Press keys 0 and 8 for the function "Read measured value block" and confirm entry with Q key.

-> Indicated on display:

Volkswagen AG. Volkswagen AG does not guarantee or accept any liability with respect to the correctness of information in this document. Copyright by Volkswagen AG. Reproduced by copyright. Copying for private or commercial purposes, in part or in whole, is not permitted unless authorised by Volkswagen AG.
satelettronica

```
Read measured value block      HELP
Input display group number XXX
```

- Press keys 0, 0 and 4 for "Display group number 4" and confirm entry with Q key.

-> Indicated on display:
(1...4 = Display zones)

```
Read measured value block      4
     1     2     3     4
```

- Observe -8 digit number block- in display zone 4 :
  (The right-hand 4 digits are of no consequence)

Display in operating mode

- ◆ Idling:

  2nd position from left must display 1
  Display: 01000000

- ◆ Part throttle:

- Rev up evenly.

  3rd position from left must display 1
  Display:: 00100000

- ◆ Full throttle:

- Briefly open throttle fully (throttle burst).

  4th position from left must briefly display 1
  Display: 00010000

- ◆ Overrun mode:

- Increase engine speed to above 3000 rpm.
- Close throttle valve abruptly.

  As long as the engine speed is above 1400 rpm 1st position from left must display 1
  Display: 11000000 (briefly)

Note:

Below 1400 rpm idling speed is again recognised.

- Press ⇒ key.
- Press keys 0 and 6 for the function "End output" and confirm entry with the Q key.

If the specifications are not attained:

- Interrogate fault memory, if necessary, repair fault and erase fault memory.
  => Page 6 , interrogating and erasing fault memory
- Check throttle valve potentiometer
  => Page 41 , Checking throttle valve control part.

Protected by copyright. Copying for private or commercial purposes, in part or in whole, is not permitted unless authorised by Volkswagen AG. Volkswagen AG does not guarantee or accept any liability with respect to the correctness of information in this document. Copyright by Volkswagen AG.

satelettronica

2.5 - Checking throttle valve control part

Note:

If the throttle valve control part (J338) is removed and installed or replaced the basic setting must be performed => Page 64 .

Special tools, testers, measuring instruments and auxiliary items required

- Fault reader V.A.G 1551 or vehicle system tester V.A.G 1552 with cable V.A.G 1551/3
- Test box V.A.G 1598/18
- Hand multimeter V.A.G 1526 or multimeter V.A.G 1715
- Adapter set V.A.G 1594
- Current flow diagram

Checking idling switch

- Connect the fault reader V.A.G 1551 (V.A.G 1552). Then switch ignition on and select engine control unit with the "Address word" 01.
  (Connecting fault reader and selecting engine control unit => Page 2 .)

-> Indicated on display:

```
Rapid data transfer      HELP
Select function XX
```

- Press keys 0 and 8 for the function "Read measured value block" and confirm entry with Q key.

-> Indicated on display:

```
Read measured value block      HELP
Input display group number XXX
```

- Press keys 0, 0 and 1 for "Display group number 1" and confirm entry with Q key.

-> Indicated on display:
(1...4 = Display zones)

```
Read measured value block 1
     1      2      3      4
```

- Observe -8 digit number block- in display zone 4 :
  (The right-hand 4 digits are of no consequence)

  4th position from left with closed throttle valve must display 0
  Display: 00000000

- Slowly open throttle valve. After free travel, a stop is reached when opening throttle valve further the 4th position from left must jump to 1
  Display: 00010000

If the specifications are not obtained:

- Remove air cleaner => Page 34 , Fig. 3 .

Display	Cause	Continuation of check
Always 1	Open circuit or short to positive	=> Page 42
Always 0	Short to earth	=> Page 42

Protected by copyright. Copying for private or commercial purposes, in part or in whole, is not permitted unless authorised by Volkswagen AG. Volkswagen AG does not guarantee or accept any liability with respect to the correctness of information in this document. Copyright by Volkswagen AG.

satelettronica

Protected by copyright. Copying for private or commercial purposes, in part or in whole, is not permitted unless authorised by Volkswagen AG. Volkswagen AG does not guarantee or accept any liability with respect to the correctness of information in this document. Copyright by Volkswagen AG.

satelettronica

Continuation of check when display is always at 1

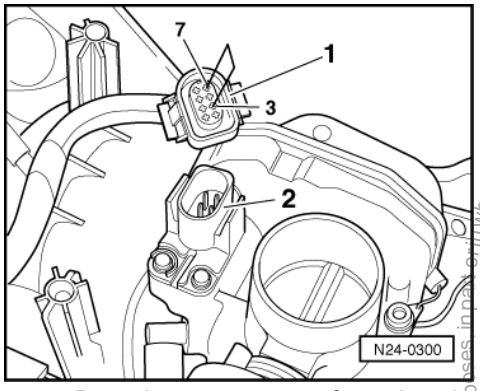

- -> Detach connector -1- from throttle valve control part -2-.
- Bridge connector contacts 3+7 with aux. cables from V.A.G 1594 and observe display.

Display 0:

- Press the ⇒key.
- Press keys 0 and 6 for the function "End output" and confirm entry with the Q key.
- Switch off ignition.
- Replace throttle valve control part
  =>Page 30 , item 4 .

Display 1:

- Press the ⇒key.
- Press keys 0 and 6 for the function "End output" and confirm entry with the Q key.
- Switch off ignition.
- Check voltage supply of throttle valve control part and wiring to control unit => Page 46 .

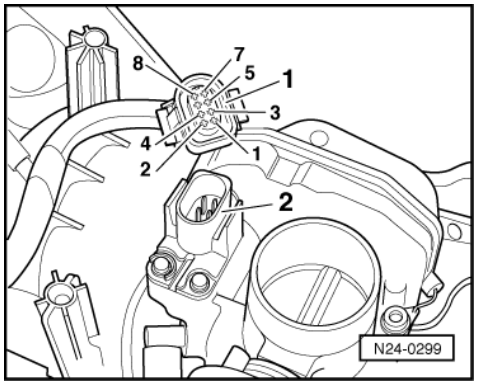

If the voltage supply and wiring is OK:

- Renew engine electronics control unit => Page 63 .

Continuation of check when display constantly shows 0

- -> Detach connector -1- from throttle valve control part -2-.

Display 1:

- Press the ⇒key.
- Press keys 0 and 6 for the function "End output" and confirm entry with the Q key.
- Switch off ignition.
- Replace throttle valve control part
  =>Page 30 , item 4 .

Display 0:

- Press the ⇒key.
- Press keys 0 and 6 for the function "End output" and confirm entry with the Q key.
- Switch off ignition.
- Check voltage supply of throttle valve control part and wiring to control unit => Page 46 .

If the voltage supply and wiring is OK:

- Renew engine electronics control unit => Page 63 .

Checking throttle valve positioner and throttle valve positioner potentiometer

Test conditions

- Coolant temperature at least 80 °C

Test sequence

- Connect fault reader V.A.G 1551 (V.A.G 1552). Start engine and select "Address word" 01 of engine control unit. When doing this the engine must be running at idling speed.
  (Connecting fault reader and selecting engine control unit => Page 2 .)

-> Indicated on display:

```
Rapid data transfer      HELP
Select function XX
```

- Press keys 0 and 8 for the function "Read measured value block" and confirm entry with Q key.

-> Indicated on display:

```
Read measured value block      HELP
Input display group number XXX
```

- Press keys 0, 0 and 3 for "Display group number 3" and confirm entry with Q key.

-> Indicated on display:
(1...4 = Display zones)

```
Read measured value block 3
     1     2     3     4
```

- Check throttle valve positioner duty cycle in display zone 4. The duty cycle must fluctuate in range 17...29 %.

If the specification is not obtained:

- Press the ⇒key.
- Press keys 0 and 6 for the function "End output" and confirm entry with the Q key.
- Switch off ignition.
- Remove air cleaner => Page 34 , Fig. 3 .

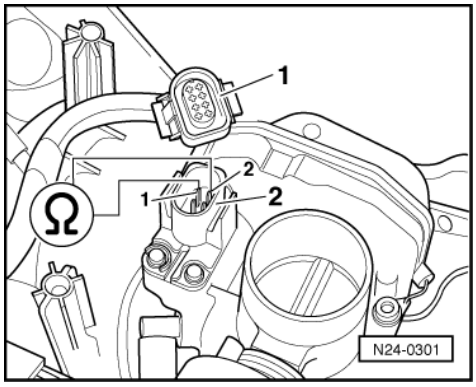

satelettronica

- -> Detach connector -1- from throttle valve control part -2-.
- Measure throttle valve positioner resistance between connector contacts 1+2.
  Specification: 3...200 ω
- Check voltage supply of throttle valve control part and wiring to control unit => Page 46 .

If no fault is detected:

- Replace throttle valve control part
  =>Page 30 , item 4 .

Checking throttle valve potentiometer

Test conditions

- Coolant temperature at least 80 °C

Test sequence

- Connect the fault reader V.A.G 1551 (V.A.G 1552). Then switch ignition on and select engine control unit with the "Address word" 01.
  (Connecting fault reader and selecting engine control unit => Page 2 .)

-> Indicated on display:

```
Rapid data transfer      HELP
Select function XX
```

- Press keys 0 and 8 for the function "Read measured value block" and confirm entry with Q key.

-> Indicated on display:

```
Read measured value block      HELP
Input display group number XXX
```

- Press keys 0, 0 and 3 for "Display group number 3" and confirm entry with Q key.

-> Indicated on display:
(1...4 = Display zones)

```
Read measured value block 3
     1      2      3      4
```

- Read off throttle valve angle in display zone 3.The throttle valve opening angle is displayed in starting position.
- Slowly open throttle valve fully and observe angle display in display zone 3. The figure must increase uniformly over
  the complete range.
- Press the ⇒key.
- Press keys 0 and 6 for the function "End output" and confirm entry with the Q key.
- Switch off ignition.

If the figure does not increase uniformly:

- Replace throttle valve control part
  =>Page 30 , item 4 .

If the display constantly shows 0 <° or is above 100 <°:

- Remove air cleaner => Page 34 , Fig. 3 .

Display	Cause	Continuation of check
0 <°	Open circuit or short to positive	=> Page 45

Protected by copyright. Copying for private or commercial purposes, in part or in whole, is not permitted unless authorised by Volkswagen AG. Volkswagen AG does not guarantee or accept any liability with respect to the correctness of information in this document. Copyright by Volkswagen AG.
satelettronica

Display	Cause	Continuation of check
above 100 <°	Short to earth	=> Page 45

Continuation of check when display 0 <°:

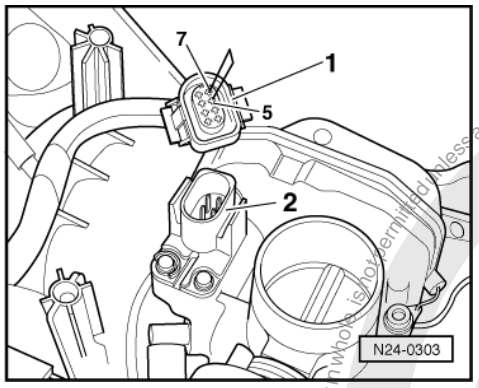

- -> Detach connector -1- from throttle valve control part -2-.
- Bridge connector contacts 5+7 with auxiliary cables from V.A.G 1594 and observe display.

Display above 100 <°:

- Press ⇒key.
- Press keys 0 and 6 for the function "End output" and confirm entry with the Q key.
- Switch off ignition.
- Replace throttle valve control part
  =>Page 30 , item 4 .

Display 0 <°:

- Press ⇒key.
- Press keys 0 and 6 for the function "End output" and confirm entry with the Q key.
- Switch off ignition.
- Check voltage supply of throttle valve control part and wiring to control unit => Page 46 .

If the voltage supply and wiring is OK:

- Renew engine electronics control unit => Page 63 .

Continuation of check when display is above 100 <°:

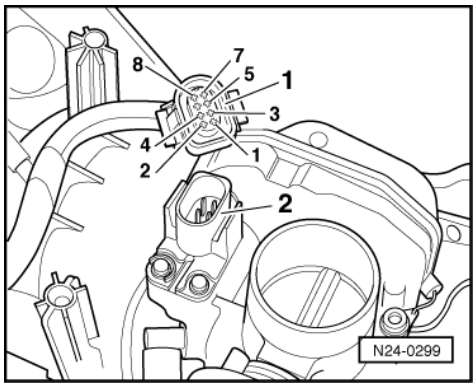

- -> Detach connector -1- from throttle valve control part -2-.

Display 0 <°:

- Press ⇒key.
- Press keys 0 and 6 for the function "End output" and confirm entry with the Q key.
- Switch off ignition.
- Replace throttle valve control part

Protected by copyright. Copyright by Volkswagen AG. Volkswagen AG does not guarantee or accept any liability with respect to the correctness of information in this document. Copyright by Volkswagen AG. Unless authorised by Volkswagen AG. Volkswagen AG does not guarantee or accept any liability with respect to the correctness of information in this document. Copyright by Volkswagen AG.
satelettronica

=>Page 30 , item 4 .

Display above 100 <°:

- Press ⇒key.
- Press keys 0 and 6 for the function "End output" and confirm entry with the Q key.
- Switch off ignition.
- Check voltage supply of throttle valve control part and wiring to control unit => Page 46 .

If the voltage supply and wiring is OK:

- Renew engine electronics control unit => Page 63 .

Checking voltage supply and wiring to control unit

- Remove air cleaner => Page 34 , Fig. 3 .

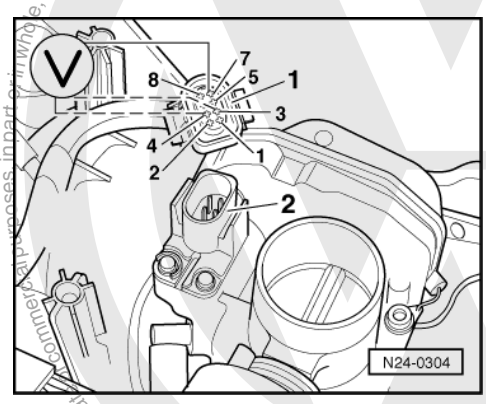

- -> Detach connector -1- from throttle valve control part -2-.
- Connect multimeter to measure voltage at connector contacts 4+7.
- Switch on ignition.
  Specification: min. 4.5 V
- Switch off ignition.
- Connect multimeter to measure voltage at connector contacts 3+7.
- Switch on ignition.
  Specification: min. 9 V

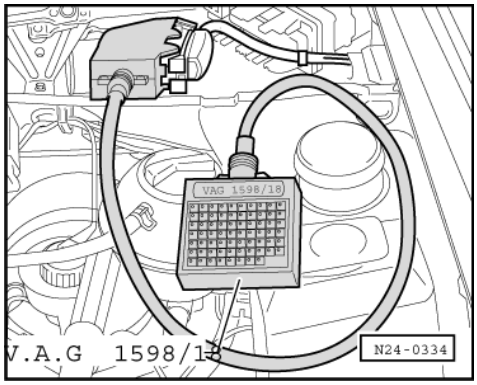

- Switch off ignition.
- -> Connect test box V.A.G 1598/18 to control unit wiring loom.

satelettronica

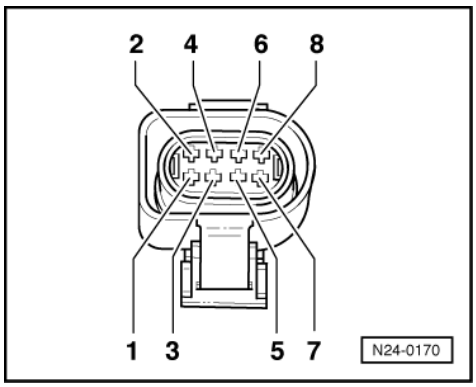

- -> Check wiring between test box and connector for open circuit according to current flow diagram.
  Contact 1+socket 2
  Contact 2+socket 26
  Contact 3+socket 10
  Contact 4+socket 14
  Contact 5+socket 41
  Contact 7+socket 17
  Contact 8+socket 16
  Wire resistance: Max. 1.5 ω
- Additionally check wires for short to one another.
  Specification: ∞ω

If no wiring fault is detected:

- Check voltage supply of engine control unit => Page 66 .

2.6 - Checking intake manifold pressure sender

Special tools, testers, measuring instruments and auxiliary items required

- Fault reader V.A.G 1551 or vehicle system tester V.A.G 1552 with cable V.A.G 1551/3
- Hand multimeter V.A.G 1526 or multimeter V.A.G 1715
- Test box V.A.G 1598/18
- Adapter set V.A.G 1594
- Current flow diagram

Test sequence

- Connect fault reader V.A.G 1551 (V.A.G 1552). Start engine and select "Address word" 01 of engine control unit. When doing this the engine must be running at idling speed.
  (Connecting fault reader and selecting engine control unit => Page 2 .)

-> Indicated on display:

```
Rapid data transfer      HELP
Select function XX
```

- Press keys 0 and 8 for the function "Read measured value block" and confirm entry with Q key.

-> Indicated on display:

```
Read measured value block      HELP
Input display group number XXX
```

- Press keys 0, 0 and 3 for "Display group number 3" and confirm entry with Q key.

-> Indicated on display:
(1...4 = Display zones)

satelettronica

```
Read measured value block 3
     1     2     3     4
```

- Read off the displayed value for engine load in display zone 2 and note this value.
- Briefly open throttle valve. The engine load value must increase briefly.

If the display shows constantly 0 % or 100 %:

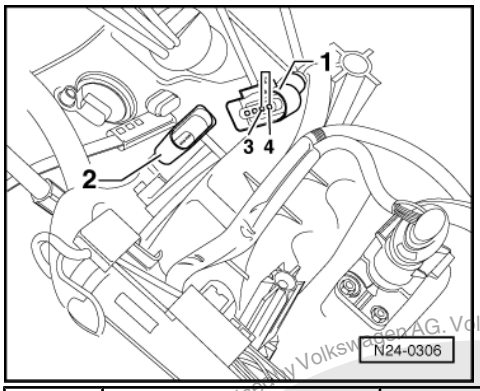

Display	Cause	Continuation of check
0 %	Open circuit or short to earth	=> Page 48
100 %	Short to positive	=> Page 49

Continuation of check when display 0%:

- -> Pull connector -1- off intake manifold pressure sender (G71) with intake air temperature sender (G42) -2- (engine stops).
- Bridge connector contacts 3+4.

Display 100 %:

- Press ⇒key.
- Press keys 0 and 6 for the function "End output" and confirm entry with the Q key.
- Switch off ignition.
- Renew the intake manifold pressure sender (G71) with intake air temperature sender (G42) -2- => Page 30 , item 1 .

Display 0 %:

- Press ⇒key.
- Press keys 0 and 6 for the function "End output" and confirm entry with the Q key.
- Switch off ignition.

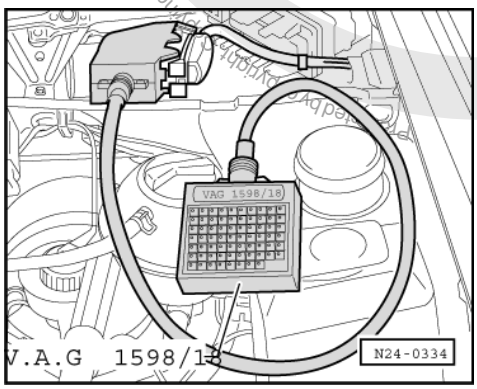

- -> Connect test box V.A.G 1598/18 to control unit wiring loom.
- Check wiring between test box and connector for open circuit according to current flow diagram.
  Contact 3+socket 37
  Contact 4+socket 18

Copyright by Volkswagen AG. Volkswagen AG does not guarantee or accept any liability with respect to the correctness of information in this document. Copyright by Volkswagen AG.
satelettronica

Wire resistance: Max. 1.5 ω
- Additionally check wiring contact 4 for short to earth and to contact 1.
  Specification: ∞ω

If no wiring fault is detected:

- Renew engine electronics control unit => Page 63 .

Continuation of check when display 100 %:

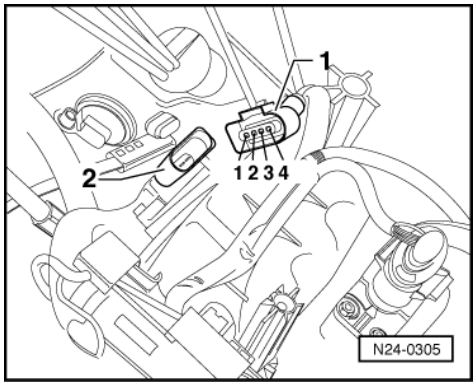

- -> Pull connector -1- off intake manifold pressure sender (G71) with intake air temperature sender (G42) -2- (engine stops).

Display 0 %:

- Press ⇒key.
- Press keys 0 and 6 for the function "End output" and confirm entry with the Q key.
- Switch off ignition.
- Renew the intake manifold pressure sender (G71) with intake air temperature sender (G42) -2- => Page 30 , item 1 .

Display 100 %:

- Press the ⇒key.
- Press keys 0 and 6 for the function "End output" and confirm entry with the Q key.
- Switch off ignition.
- Pull connector off engine control unit.
- Check wiring to control unit connector at 4 pin connector contact 4 for short to wire contact 3 and to battery positive.
  Specification: ∞ω

If no wiring fault is detected:

- Renew engine electronics control unit => Page 63 .

2.7 - Checking coolant temperature sender

Special tools, testers, measuring instruments and auxiliary items required

- Fault reader V.A.G 1551 or vehicle system tester V.A.G 1552 with cable V.A.G 1551/3
- Test box V.A.G 1598/18
- Hand multimeter V.A.G 1526 or multimeter V.A.G 1715
- Adapter set V.A.G 1594
- Current flow diagram

Test sequence

- Connect fault reader V.A.G 1551 (V.A.G 1552). Start engine and select "Address word" 01 of engine control unit. When doing this the engine must be running at idling speed.

Protected by copyright. Copy for private or commercial purposes, in part, is not permitted unless authorised by Volkswagen AG. Volkswagen AG does not guarantee or accept any liability with respect to the correctness of information in this document. Copyright by Volkswagen AG.

satelettronica

(Connecting fault reader and selecting engine control unit => Page 2 .)

-> Indicated on display:

```
Rapid data transfer      HELP
Select function XX
```

- Press keys 0 and 8 for the function "Read measured value block" and confirm entry with Q key.

-> Indicated on display:

```
Read measured value block      HELP
Input display group number XXX
```

- Press keys 0, 0 and 1 for "Display group number 1" and confirm entry with Q key.

-> Indicated on display:
(1...4 = Display zones)

```
Read measured value block      1
     1      2      3      4
```

- Note coolant temperature value in display zone 2.

Display	Cause	Continuation of check
-40 °C	Open circuit or short to positive	=> Page 50
Approx. 128 °C	Short to earth	=> Page 51
Approx. coolant temperature1)	---	Only if sporadic faults have been detected:2) => Page 52

1) If a temperature is displayed which deviates greatly from the ambient temperature of the sender, check sender wiring for transfer resistances.

2) Check is only possible when the engine is cold.

Continuation of check when display -40 °C:

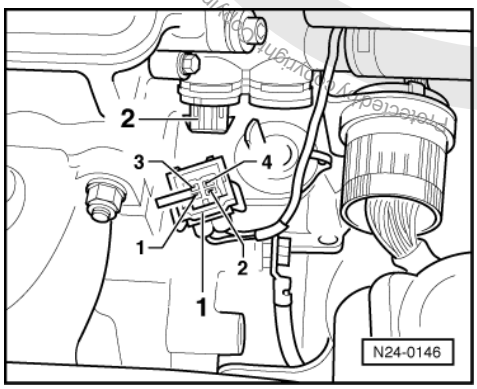

- -> Pull 4 pin connector -1- off coolant temperature sender (G62) -2-.
- Bridge connector contacts 1+3 using aux. cables from V.A.G 1594 and observe display.

Display approx. 128 ° C:

- Press ⇒key.
- Press keys 0 and 6 for the function "End output" and confirm entry with the Q key.
- Switch off ignition.

Reproduction or forwarding to private or commercial purposes, in whole or in part, is not permitted unless authorised by Volkswagen AG. Volkswagen AG does not guarantee or accept any liability with respect to the correctness of information in this document. Copyright by Volkswagen AG.

satelettronica

- Renew coolant temperature sender -2- => Page 26 , item 19 .

Display -40 ° C:

- Press ⇒key.
- Press keys 0 and 6 for the function "End output" and confirm entry with the Q key.
- Switch off ignition.

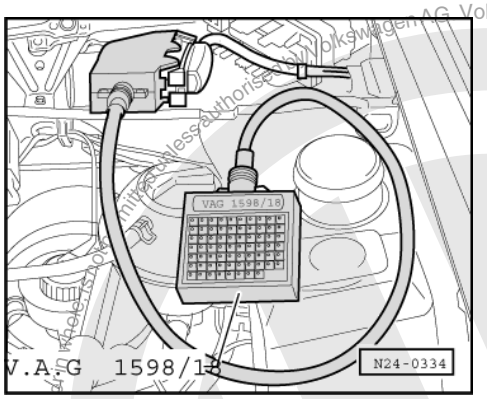

- -> Connect test box V.A.G 1598/18 to control unit wiring loom.
- Check wire between test box socket 42 and 4 pin connector contact 3 for open circuit according to current flow diagram.
  Wire resistance: Max. 1.5 ω
- Check wiring additionally for short circuit to battery positive.
  Specification: ∞ω
- Check wire between test box socket 17 and 4 pin connector contact 1 for open circuit according to current flow diagram.
  Wire resistance: Max. 1.5 ω

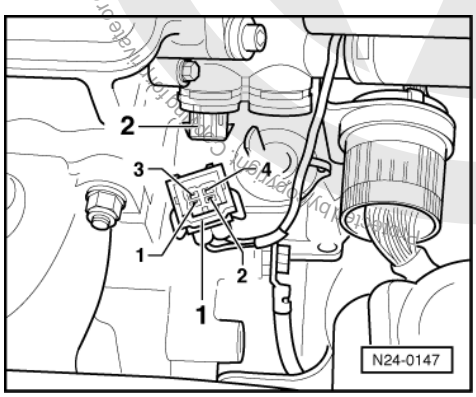

If no fault in wire is detected:

- Renew engine electronics control unit => Page 63 .

Continuation of check when display 128 °C:

- -> Pull 4 pin connector -1- off coolant temperature sender (G62) -2-.

Display -40 ° C:

- Press ⇒key.
- Press keys 0 and 6 for the function "End output" and confirm entry with the Q key.
- Switch off ignition.
- Renew coolant temperature sender -2- => Page 26 , item 19 .

Display approx. 128 ° C:

- Press ⇒key.
- Press keys 0 and 6 for the function "End output" and confirm entry with the Q key.
- Switch off ignition.

Volkswagen AG does not guarantee or accept any liability with respect to the correctness of information in this document. Copyright by Volkswagen AG.
satelettronica

- Pull connector off engine control unit.
- Check wire between control unit connector and 4 pin connector contact 3 for short to wire contact 1 and to vehicle earth, according to current flow diagram.
  Specification: ∞ω

If no fault in wire is detected:

- Renew engine electronics control unit => Page 63 .

Continuation of check when display = coolant temperature:

Functional check of sender

- Observe coolant temperature value in display zone 2, whilst engine is running. The temperature figure must increase uniformly and without interruption.

Notes:

- If the display on fault reader jumps by 2...5 °C, it is a control unit fault and not caused by a defective sender.
- If irregular engine running occurs in certain temperature ranges and the temperature figure does not increase without interruption, the temperature signal is temporarily interrupted and the sender must be renewed.

- Press ⇒key.
- Press keys 0 and 6 for the function "End output" and confirm entry with the Q key.

2.8 - Checking intake air temperature sender

Special tools, testers, measuring instruments and auxiliary items required

- Fault reader V.A.G 1551 or vehicle system tester V.A.G 1552 with cable V.A.G 1551/3
- Test box V.A.G 1598/18
- Hand multimeter V.A.G 1526 or multimeter V.A.G 1715
- Adapter set V.A.G 1594
- Current flow diagram
- Chilling spray (commercially available)

Test sequence

- Connect the fault reader V.A.G 1551 (V.A.G 1552). Then switch ignition on and select engine control unit with the "Address word" 01.
  (Connecting fault reader and selecting engine control unit => Page 2 .)

-> Indicated on display:

```
Rapid data transfer      HELP
Select function XX
```

- Press keys 0 and 8 for the function "Read measured value block" and confirm entry with Q key.

-> Indicated on display:

```
Read measured value block     HELP
Input display group number XXX
```

- Press keys 0, 0 and 2 for "Display group number 2" and confirm entry with Q key.

-> Indicated on display:
(1...4 = Display zones)

```
Read measured value block 2
     1     2     3     4
```

Protected by copyright. Copying for private or commercial purposes, in part or in whole, is not permitted unless authorised by Volkswagen AG. Volkswagen AG does not guarantee or accept any liability with respect to the correctness of information in this document. Copyright by Volkswagen AG.
satelettronica

- Read off intake air temperature value in display zone 4.

Display	Cause	Continuation of check
-40 °C	Open circuit or short to positive	=> Page 53
129 °C	Short to earth	=> Page 54
Approx. ambient temperature1)	---	=> Page 54

1) If a temperature is displayed which is below the ambient air temperature of the sender, check sender wiring for transfer resistances. Note when doing this that sender is heated from external sources, e.g. radiated heat when engine is not running.

Continuation of check when display -40 °C:

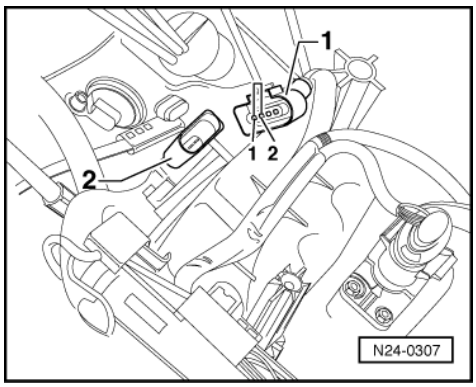

- -> Pull connector -1- off intake air temperature sender (G42) with intake manifold pressure sender (G71) -2-.
- Bridge connector contacts 1+2 using aux. cables from V.A.G 1594 and observe display.

Display 129 ° C:

- Press ⇒key.
- Press keys 0 and 6 for the function "End output" and confirm entry with the Q key.
- Switch off ignition.
- Renew intake air temperature sender (G42) with intake manifold pressure sender -2- =>Page 30 , item 1 .

Display -40 ° C:

- Press ⇒key.
- Press keys 0 and 6 for the function "End output" and confirm entry with the Q key.
- Switch off ignition.

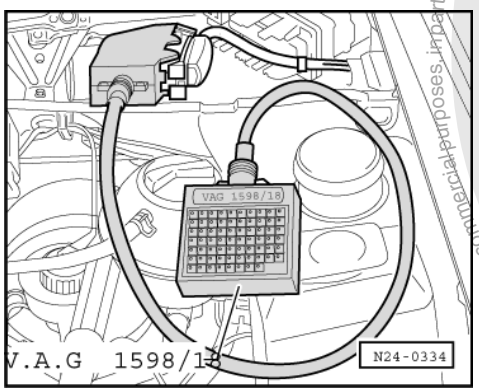

- -> Connect test box V.A.G 1598/18 to control unit wiring loom.
- Check wire between test box socket 43 and 4 pin connector contact 2 for open circuit according to current flow diagram.

satelettronica
Protected by copyright. Copying for private or commercial purposes, in part or in whole, is not permitted unless authorised by Volkswagen AG. Volkswagen AG does not guarantee or accept any liability with respect to the correctness of information in this document. Copyright by Volkswagen AG.

Wire resistance: Max. 1.5 ω
- Check wiring additionally for short circuit to battery positive.
  Specification: ∞ω
- Check wire between test box socket 17 and 4 pin connector contact 1 for open circuit according to current flow diagram.
  Wire resistance: Max. 1.5 ω

If no fault in wire is detected:

- Renew engine electronics control unit => Page 63 .

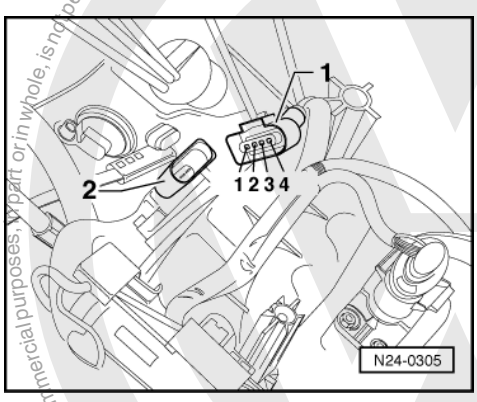

Continuation of check when display 129 °C:

- -> Pull connector -1- off intake air temperature sender (G42) with intake manifold pressure sender (G71) -2-.

Display -40 ° C:

- Press ⇒key.
- Press keys 0 and 6 for the function "End output" and confirm entry with the Q key.
- Switch off ignition.
- Renew intake air temperature sender (G42) with intake manifold pressure sender -2- =>Page 30 , item 1 .

Display 129 ° C:

- Press ⇒key.
- Press keys 0 and 6 for the function "End output" and confirm entry with the Q key.
- Switch off ignition.
- Pull connector off engine control unit.
- Check wiring to control unit connector at 4 pin connector contact 2 for short to wire contact 1 and to vehicle earth.
  Specification: ∞ω

If no wiring fault is detected:

- Renew engine electronics control unit => Page 63 .

Continuation of check when display = ambient temperature:

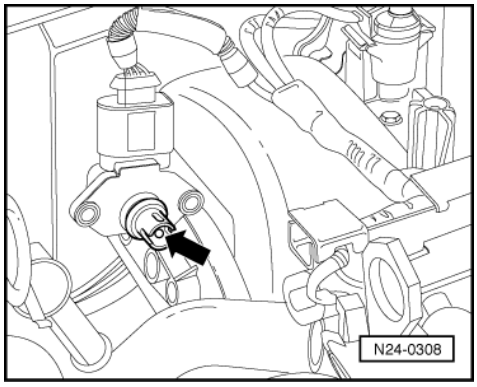

Volkswagen AG. Volkswagen AG does not guarantee or accept any liability with respect to the correctness of information in this document. Copyright by Volkswagen AG. Protected by copyright. Copying for private or commercial purposes, in part or in whole, is not permitted unless authorised by Volkswagen AG.

satelettronica

- -> Remove intake air temperature sender together with intake manifold pressure sender (connector remains connected).
- Note intake air temperature value in display zone 4.
- Spray sender with commercial chilling agent whilst observing the temperature value. The temperature value must
  decrease.
- Press ⇒key.
- Press keys 0 and 6 for the function "End output" and confirm entry with the Q key.

2.9 - Checking injectors

Checking activation

Special tools, testers, measuring instruments and auxiliary items required

- Test box V.A.G 1598/18
- Hand multimeter V.A.G 1526 or multimeter V.A.G 1715
- Diode test lamp V.A.G 1527
- Adapter set V.A.G 1594
- Current flow diagram

Check conditions

- Hall sender in distributor must be OK.
- Fuel pump relay must be OK

Test sequence

- Remove air cleaner => Page 34 , Fig. 3 .

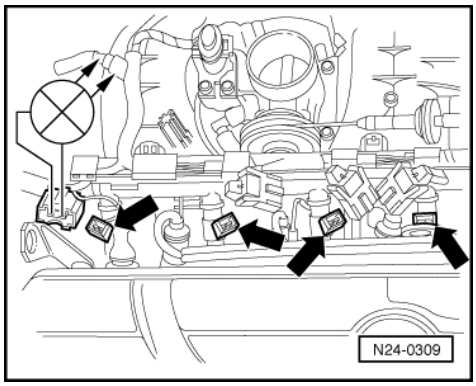

- -> Pull connector off injectors -arrows-.
- Connect diode test lamp V.A.G 1527 using aux. cables from V.A.G 1594 to connector contacts of Cyl. 1.
- Operate starter.
  The LED must flicker
- Repeat check at the injector connectors Cyl. 2...4.

The LED does not flicker on any cylinder:

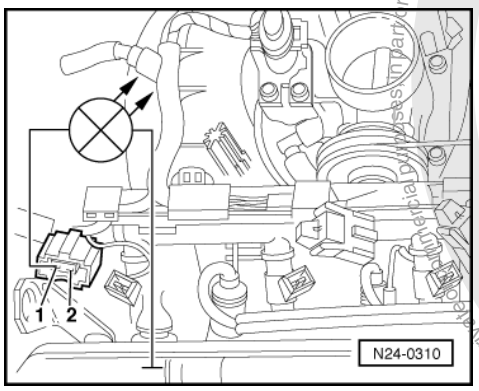

Protected by copyright. Copying for private or commercial purposes, in part or in whole, is not permitted unless authorised by Volkswagen AG. Volkswagen AG does not guarantee or accept any liability with respect to the correctness of information in this document. Copyright by Volkswagen AG.
satelettronica

- -> Connect diode test lamp to connector Cyl. 1, contact 1 and earth.
- Operate starter.
  The LED must light up

If the LED does not light up:

- Check wire between 2 pin connector contact 1 and fuel pump relay (J17) for open circuit according to current flow diagram.
  Wire resistance: max. 1.5 ω

The LED flickers on one or several cylinders:

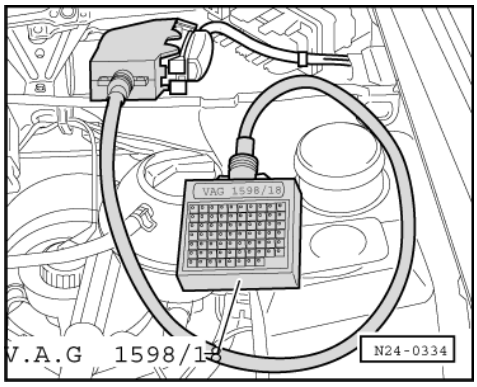

- -> Connect test box V.A.G 1598/18 to control unit wiring loom.
- Check wiring between test box and connectors of injectors for open circuit according to current flow diagram.
  Cyl. 1 connector, contact 2+socket 7
  Cyl. 2 connector, contact 2+socket 6
  Cyl. 3 connector, contact 2+socket 28
  Cyl. 4 connector, contact 2+socket 4
  Wire resistance: Max. 1.5 ω
- Additionally check wires for short to one another.
  Specification: ∞ω
- Check wiring between connector contacts 1 of injectors for open circuit.
  Wire resistance: Max. 1.5 ω

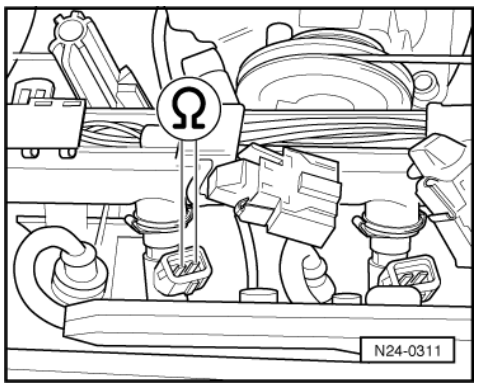

- Additionally check wires for short to one another.
  Specification: ∞ω

Checking resistance of injectors with wiring

- -> Check of resistance injectors between contacts.
  Specification: 14...17 ω

Checking spray pattern and for leaks

Special tools, testers, measuring instruments and auxiliary items required

- Adapter set V.A.G 1594

Protected by copyright. Copying for private or commercial purposes, in part or in whole, is not permitted unless authorised by Volkswagen AG. Volkswagen AG does not guarantee or accept any liability with respect to the correctness of information in this document. Copyright by Volkswagen AG.
satelettronica

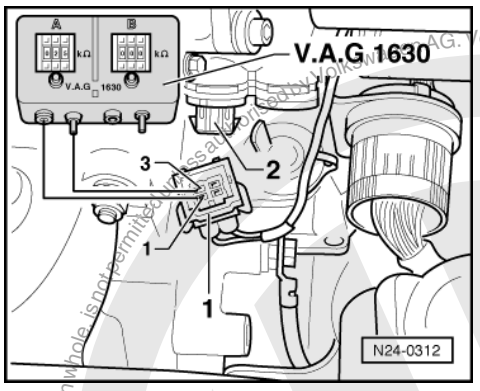

- Digital potentiometer V.A.G 1630
- Measuring unit V.A.G 1602

Test sequence

- Pull 3 pin connector off ignition transformer.
- -> Pull 4 pin connector -1- off coolant temperature sender (G62) -2-.
- Connect digital potentiometer V.A.G 1630 using aux. cables from V.A.G 1594 to connector contacts 1+3 and set connected side to 15 kω.
- Pull connector off throttle valve control part, oil pressure switch and intake manifold pressure sender, and unclip wiring at intake pipe and coolant regulator housing.
- Remove fuel manifold complete with all injectors from intake pipe (fuel hoses remain connected).

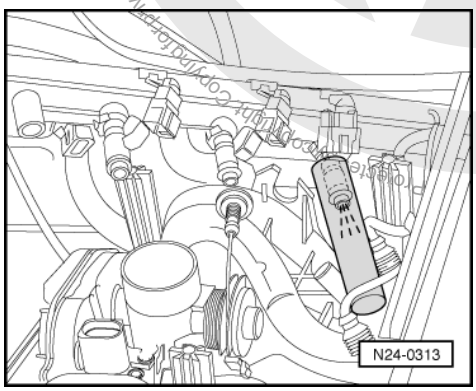

- -> Hold a small container under the injector to be checked and pull connectors off all other injectors.
- Operate starter, using a 2nd person. Injector must spray pulsatingly.
- Repeat check with other injectors ensuring that injector to be checked is only connected.
- Switch off ignition and afterwards check injectors for leaks. No more than
  2 drops/min
  may leak from each injector.

Note:

When installing the injectors ensure that the O rings

are not damaged.

2.10 - Checking fuel pressure regulator and holding pressure

The fuel pressure regulator controls the fuel pressure dependent upon intake manifold pressure.

Special tools, testers, measuring instruments and auxiliary items required

- Pressure tester V.A.G 1318
- Adapter 1318/10
- Adapter 1318/11

Copyright by Volkswagen AG. Volkswagen AG does not guarantee or accept any liability with respect to the correctness of information in this document. Copyright by Volkswagen AG.
satelettronica

- Adapter 1318/16

Test conditions

- Fuel pump delivery rate OK, checking delivery rate:

=> Repair group 20; Removing and installing parts of the fuel supply system; Checking fuel pump Removing and installing parts of the fuel supply system Checking fuel pump

Test sequence

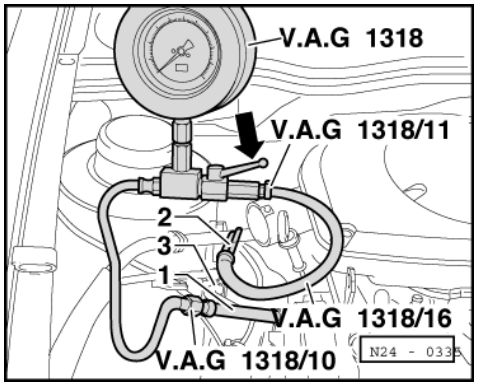

Warning!
Fuel system is under pressure! Before opening the system place a cloth around the connection. Then release pressure by carefully loosening the connection.

- -> Pull the fuel supply hose (white marking) -1- off fuel supple pipe -2-.
- Connect pressure measured device V.A.G 1318 using adapter 1318/10 to hose and using adapters /11 and /16 to fuel supply pipe.
- Open measured device cut-off tap. (The handle points in throughflow direction -arrow-).
- Start the engine and run at idling speed.

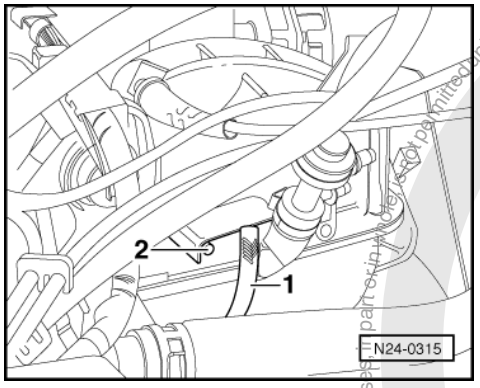

- Measure fuel pressure.
  Specification: Approx. 2.5 bar
- -> Pull vacuum hose off fuel pressure regulator -1- at intake pipe -2-. The fuel pressure must increase
  to approx. 3.0 bar.
- Switch off ignition.
- Check for leaks and holding pressure by watching pressure drop on gauge. After 10 minutes there must be a residual pressure of
  at least 2 bar.

If the holding pressure drops below 2 bar:

Protected by copyright. Copyright for private and commercial purposes, part reprint is not permitted unless authorised by Volkswagen AG. Volkswagen AG does not guarantee or accept any liability with respect to the correctness of information in this document. Copyright by Volkswagen AG.
satelettronica

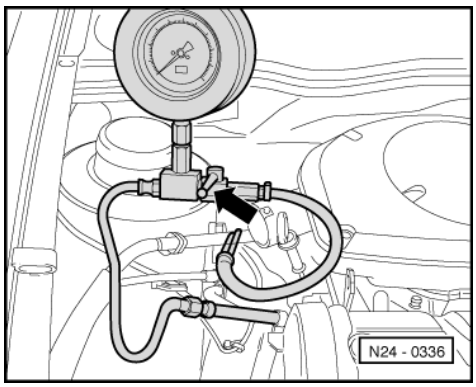

- Start the engine and run at idling speed.
- -> Switch ignition off after the pressure has built-up. At the same time close pressure measured device cut-off tap (handle cross throughflow direction -arrow-).
- Observe pressure drop on gauge.

If the pressure does not drop:

- Check fuel pump non-return valve.

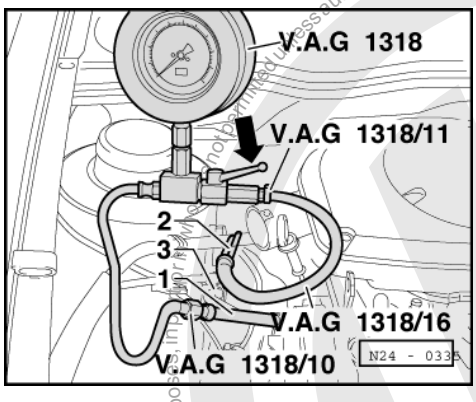

=> Repair group 20; Removing and installing parts of the fuel supply system; Checking fuel pump non-return valve. Removing and installing parts of the fuel supply system Checking fuel pump non-return valve.

If the pressure drops again:

- -> Open pressure tester V.A.G 1318 shut-off tap (handle in throughflow direction -arrow-).
- Start the engine and run at idling speed.
- Switch ignition off after the pressure has build-up. At the same time pinch/seal the return hose (with blue marking) -3- together.

If the pressure does not drop:

- Renew fuel pressure regulator
  =>Page 29 , item 4 .

If the pressure drops again:

- Check pipe connections, O-rings on fuel manifold and injectors for leaks.
- Check pressure gauge for leaks.

Note:

Before removing pressure gauge place a cloth around the connections to be loosened.

Protected by copyright. Copyright by Volkswagen AG. Volkswagen AG does not guarantee or accept any liability with respect to the correctness of information in this document. Copyright by Volkswagen AG.
satelettronica

2.11 - Checking intake air system for leaks (unmetered air)

Special tools, testers, measuring instruments and auxiliary items required

- Fault reader V.A.G 1551 or vehicle system tester V.A.G 1552 with cable V.A.G 1551/3
- Engine leak detector spray G 001 800 A1

Test sequence

Notes:

- The vacuum in the intake system will cause the leak detector spray to be drawn in with the unmetered air. The leak detector spray reduces the ignitability of the mixture. This leads to a drop in engine speed and to a change of Lambda probe reading.
- The safety precautions listed on the container must be adhered to.

- Connect fault reader V.A.G 1551 (V.A.G 1552). Start engine and select "Address word" 01 of engine control unit. When doing this the engine must be running at idling speed.
  (Connecting fault reader and selecting engine control unit => Page 2 .)

-> Indicated on display:

```
Rapid data transfer      HELP
Select function XX
```

- Press keys 0 and 8 for the function "Read measured value block" and confirm entry with Q key.

-> Indicated on display:

```
Read measured value block      HELP
Input display group number XXX
```

- Press keys 0, 0 and 1 for "Display group number 1" and confirm entry with Q key.

-> Indicated on display:
(1...4 = Display zones)

```
Read measured value block      1
     1      2      3      4
```

- Note engine speed in display zone 1.
- Note Lambda probe voltage in display zone 3 and the area it fluctuates in.
- Systematically spray parts of the intake system with engine leak detector spray.

Engine speed or Lambda probe voltage does not change:

- Press the ⇒key.
- Press keys 0 and 6 for the function "End output" and confirm entry with the Q key.

If the engine speed drops or the Lambda probe voltage changes:

- Press the ⇒key.
- Press keys 0 and 6 for the function "End output" and confirm entry with the Q key.
- Check sprayed areas of intake system for leaks and rectify if necessary.

2.12 - Checking intake air preheating

Checking regulating flap

- Remove air cleaner intake support.

Copyright by Volkswagen AG. Volkswagen AG does not guarantee or accept any liability with respect to the correctness of information in this document. Copying for private or commercial purposes, in part or in whole, is not permitted unless authorised by Volkswagen AG. Protected by copyright.
satelettronica

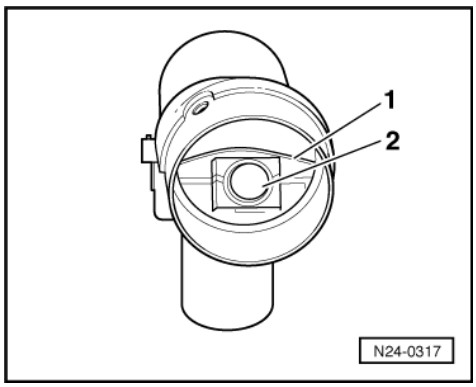

- -> Check control flap position -1-.
  - Above +23 °C flap must close warm air connection
  - Below +10 °C flap opens warm air connection

Note:

The function of the thermo element -2- can be checked easily by spraying with a commercial chilling agent.

Protected by copyright. Copying for private or commercial purposes, in part or in whole, is not permitted unless authorised by Volkswagen AG. Volkswagen AG does not guarantee or accept any liability with respect to the correctness of information in this document. Copyright by Volkswagen AG.

satelettronica

2.13 - Wire routing engine wiring loom

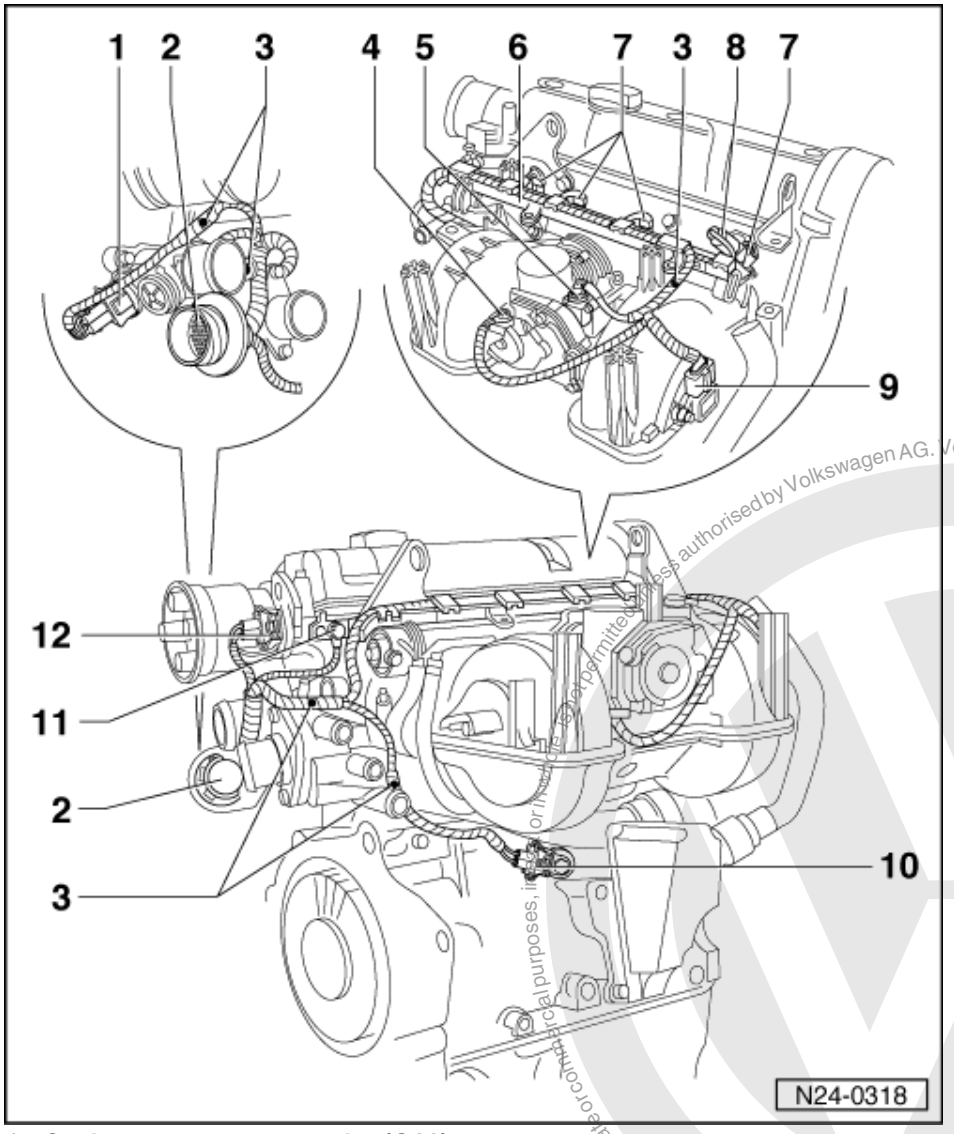

1 Coolant temperature sender (G62)
2 Central connector
3 Push-in clip
- Attached to wiring loom

4 Earth connection
- For throttle valve control part

5 Throttle valve control part (J338)
6 Cable guide
7 Injectors (N30...N33)
8 Oil pressure switch (F22)

Protected by copyright. Copying for private or commercial purposes, in part or in whole, is not permitted unless authorised by Volkswagen AG. Volkswagen AG does not guarantee or accept any liability with respect to the correctness of information in this document. Copyright by Volkswagen AG.
satelettronica

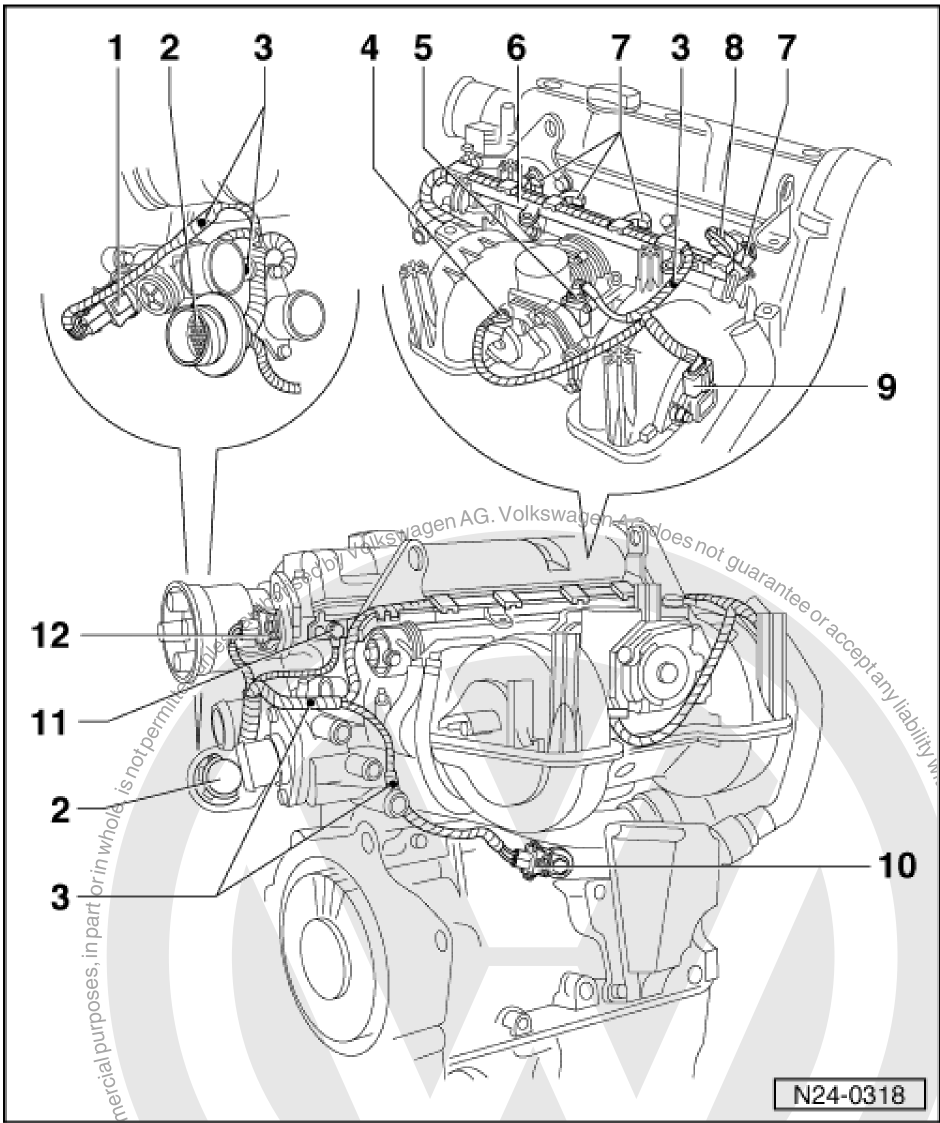

9 Intake manifold pressure sender (G71) with intake air temperature sender (G42)
10 Knock sensor 1 (G61)
1 Earth connection
- Engine earth
2 Hall sender (G40)

Protected by copyright. Copying for private or commercial purposes, in part or in whole, is not permitted unless authorised by Volkswagen AG. Volkswagen AG does not guarantee or accept any liability with respect to the correctness of information in this document. Copyright by Volkswagen AG.

3 - Replacing and matching engine control unit

3.1 - Replacing and matching engine control unit

3.2 - Replacing engine control unit

The engine control unit regulates the injection, throttle valve control part, Lambda control, ignition, knock control, activated charcoal filter solenoid valve 1, governed speed via injectors as well as self-diagnosis

satelettronica

Conditions

- Ignition switched off

Work sequence

- Remove plenum chamber cover, left.
- Release the control unit connector and pull connector off.
- Remove the control unit complete with securing plate.
- Replace the control unit.

Installation is carried out in reverse order to removal. Then:

- Perform basic setting => Page 64 .
- Match new control unit to the electronic immobilizer => Page 65
- Then subsequently interrogate the fault memory of the new engine control unit and erase the fault memory if necessary.

3.3 - Performing basic setting

Note:

The basic setting with the ignition switched on, matches the engine control unit to the throttle valve control part.

Special tools, testers, measuring instruments and auxiliary items required

◆ Fault reader V.A.G 1551 or vehicle system tester V.A.G 1552 with cable V.A.G 1551/3

Test conditions

- No faults must be stored in fault memory
  => Page 6 , interrogating fault memory

Test sequence

- Connect the fault reader V.A.G 1551 (V.A.G 1552). Then switch ignition on and select engine control unit with the "Address word" 01.
  (Connecting fault reader and selecting engine control unit => Page 2 .)

-> Indicated on display:

```
Rapid data transfer     HELP
Select function XX
```

- Press keys 0 and 4 for the function "Introduction of basic setting" and confirm entry with Q key.

-> Indicated on display:

```
Basic setting     HELP
Input display group number XXX
```

- Press keys 0, 0 and 1 for "Display group number 1" and confirm entry with Q key.

-> Indicated on display:
(1...4 = Display zones)

```
System in basic setting 1
     1     2     3     4
```

After pressing the Q key, the throttle valve positioner will be moved to the min., max. and three intermediate positions and the control unit will store each individual throttle valve angle in the non-volatile memory. This procedure lasts approx. 10 seconds. The throttle valve will then remain in the start position.

Protected by copyright. Copyright by Volkswagen AG. Volkswagen AG does not guarantee or accept any liability with respect to the correctness of information in this document. Copyright by Volkswagen AG.
satelettronica

Note:

If the basic setting of the control unit is interrupted, the cause could be one of the following:

- Throttle valve cannot reach the mechanical stop because of contamination e.g. oil deposits or an incorrectly adjusted throttle cable.
- Battery voltage too low.
- Throttle valve control unit or wiring is defective. Checking => Page 41 .

After an interruption the fault "Basic setting not completed, fault in basic setting" is stored in fault memory. When next switching on ignition the basic setting is automatically performed again.

- End the engine basic setting by pressing the⇒ key.
- Press keys 0 and 6 for the function "End output" and confirm entry with the Q key.

If the throttle valve positioner does not move:

- Observe 8 digit number block in display zone 4. The 2nd, 3rd and 5th position from right must be at 0.
  Display: 00000000

Note:

If in display zone 4 a 1 is displayed in the mentioned positions then test prerequisites are not fulfilled:

=>Page 17 ; Significance of figures in 8 digit number block

All positions at 0:

- Check throttle valve control part
  => Page 41 .

3.4 - Matching engine control unit to electronic immobilizer

Special tools, testers, measuring instruments and auxiliary items required

- Fault reader V.A.G 1551 or vehicle system tester V.A.G 1552 with cable V.A.G 1551/3

Test conditions

- Authorized vehicle key required.

Work sequence

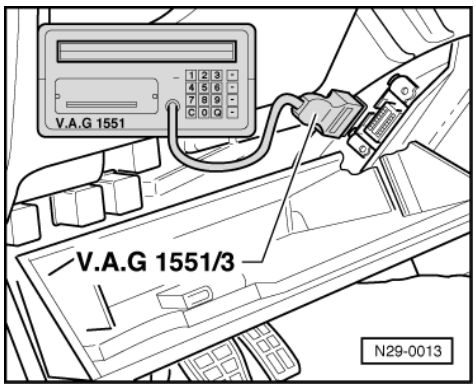

- -> Fold driver's side stowage compartment down.
- Connect fault reader V.A.G 1551 or vehicle system tester V.A.G 1552 with cable V.A.G 1551/3.
- Switch on ignition.
- Operate fault reader or vehicle system tester taking into account the information on the display:
- Press key 1 for "Rapid data transfer".
- Press keys 2 and 5 for address word "Immobilizer" and confirm entry with Q key.

Protected by copyright. Copyright by Volkswagen AG. Copying for private or commercial purposes, in part or in whole, is not permitted unless authorised by Volkswagen AG. Volkswagen AG does not guarantee or accept any liability with respect to the correctness of information in this document.
satelettronica

- After the immobilizer control unit has registered, press ⇒ key.

-> Indicated on display:

```
Rapid data transfer      HELP
Select function XX
```

- Press keys 1 and 0 for function "Adaption" and confirm entry with Q key.

-> Indicated on display:

```
Adaption
Feed in channel number XX
```

- Press key 0 twice for "Channel number 0" and confirm entry with Q key.

-> Indicated on display:

```
Adaption     Q
Erase learnt values?
```

- Confirm input with Q key.

-> Indicated on display:

```
Adaption
Learnt values have been erased
```

- Conclude adaption by pressing ⇒ key.
- Press keys 0 and 6 for the function "End output" and confirm entry with the Q key.
- Switch off ignition

Note:

The identity of the engine control unit is read into the immobilizer control unit when next switching the ignition on.

3.5 - Checking control unit voltage supply

Special tools, testers, measuring instruments and auxiliary items required

- Fault reader V.A.G 1551 or vehicle system tester V.A.G 1552 with cable V.A.G 1551/3
- Test box V.A.G 1598/18
- Hand multimeter V.A.G 1526 or multimeter V.A.G 1715
- Adapter set V.A.G 1594
- Current flow diagram

Check conditions

- Battery voltage at least 11 V.
- Alternator must be OK

Test sequence

- Connect fault reader V.A.G 1551 (V.A.G 1552). Start engine and select "Address word" 01 of engine control unit. When doing this the engine must be running at idling speed.
  (Connecting fault reader and selecting engine control unit => Page 2 .)

-> Indicated on display:

```
Rapid data transfer      HELP
Select function XX
```

- Press keys 0 and 8 for the function "Read measured value block" and confirm entry with Q key.

-> Indicated on display:

Protected by copyright. Copying for private or commercial purposes, in part or in whole, is not permitted unless authorised by Volkswagen AG. Volkswagen AG does not guarantee or accept any liability with respect to the correctness of information in this document. Copyright by Volkswagen AG.
satelettronica

```
Read measured value block     HELP
Input display group number XXX
```

- Press keys 0, 0 and 2 for "Display group number 2" and confirm entry with Q key.

-> Indicated on display:
(1...4 = Display zones)

```
Read measured value block 2
     1     2     3     4
```

- Read off display values in display zone 3.
  Specification: constantly approx. battery voltage
- Press ⇒key.
- Press keys 0 and 6 for the function "End output" and confirm entry with the Q key.

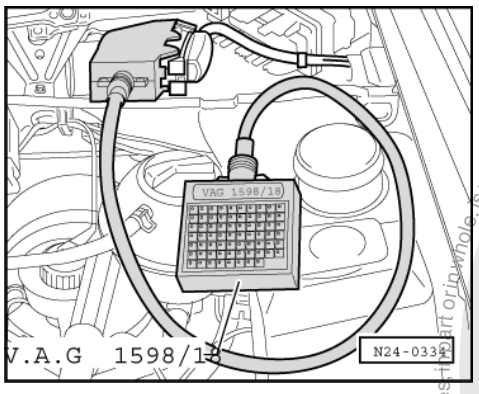

If the displayed figure fluctuates or the battery voltage is not attained:

- Switch off ignition.
- -> Connect test box V.A.G 1598/18 to control unit wiring loom.

- Measure supply voltage between test box sockets 1+21 using multimeter and adapter cables from V.A.G 1594:
  Specification: at least 11 V
- Switch on ignition.
- Measure supply voltage between test box sockets 1+23 using multimeter and adapter cables from V.A.G 1594:
  Specification: at least 11 V

If the specifications are not attained:

- Check wiring connections according to relay plate according to current flow diagram.

4 - Checking additional signals

4.1 - Checking additional signals

4.2 - Testing speed signal

Special tools, testers, measuring instruments and auxiliary items required

- Fault reader V.A.G 1551 or vehicle system tester V.A.G 1552 with cable V.A.G 1551/3
- Hand multimeter V.A.G 1526 or multimeter V.A.G 1715
- Test box V.A.G 1598/18
- Adapter set V.A.G 1594

Protected by copyright. Copyright by Volkswagen AG. Volkswagen AG does not guarantee or accept any liability with respect to the correctness of information in this document. Copyright by Volkswagen AG. Reproduction, in part or in whole, is not permitted unless authorised by Volkswagen AG. Copyright by Volkswagen AG. Copying for private or commercial purposes, in part or in whole, is not permitted unless authorised by Volkswagen AG.
satelettronica

- Current flow diagram

Test conditions

- Speedometer must be OK., checking speedometer:

=> Repair group 90; Electrical system Electrical system

Test sequence

Note:

To check the speed signal the vehicle must be driven. To do this a second person is necessary.

Warning! Secure fault reader to rear seat and operate from this position.

- Connect fault reader V.A.G 1551 (V.A.G 1552). Start engine and select "Address word" 01 of engine control unit. When doing this the engine must be running at idling speed.
  (Connecting fault reader and selecting engine control unit => Page 2 .)

-> Indicated on display:

```
Rapid data transfer      HELP
Select function XX
```

- Press keys 0 and 8 for the function "Read measured value block" and confirm entry with Q key.

-> Indicated on display:

```
Read measured value block      HELP
Input display group number XXX
```

- Press keys 0, 0 and 4 for "Display group number 4" and confirm entry with Q key.

-> Indicated on display:
(1...4 = Display zones)

```
Read measured value block 4
     1     2     3     4
```

- Carry out test drive and when doing use a 2nd person to observe display.
- Note display value with vehicle stationary.
- Drive off slowly. The displayed value must decrease.
- Press the ⇒key.
- Press keys 0 and 6 for the function "End output" and confirm entry with the Q key.

If the display does not change:

- Switch off ignition.

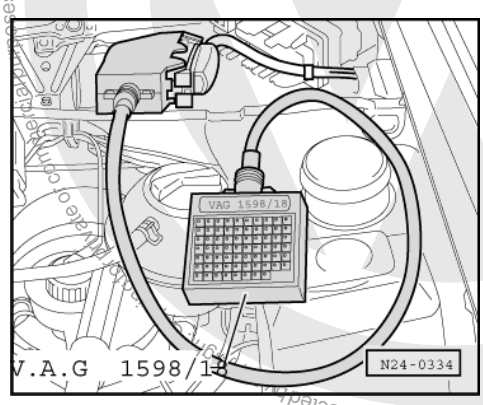

Protected by Volkswagen AG. Volkswagen AG does not guarantee or accept any liability with respect to the correctness of information in this document. Copyright by Volkswagen AG.
satelettronica

- -> Connect test box V.A.G 1598/18 to control unit wiring loom.
- Set multimeter scale to measure voltage and connect between test box sockets 1+36.
- Switch on ignition.
- Lift front left-hand wheel.
- Rotate front wheel and observe voltage display.
  Specification: between 0 and at least 4 Volt fluctuating

If the display does not fluctuate:

- Check wiring to speedometer or to speedometer sender.

=> Current flow diagrams, Electrical fault finding and Fitting locations binder

4.3 - Checking air conditioner and air conditioner compressor signals

These signals from the air conditioner cause the initial control value for the idling stabilization to be increased when the air conditioner compressor switches in. Thereby the idling stabilization remains in the middle of the regulating range.

Special tools, testers, measuring instruments and auxiliary items required

- Fault reader V.A.G 1551 or vehicle system tester V.A.G 1552 with cable V.A.G 1551/3
- Test box V.A.G 1598/18
- Hand multimeter V.A.G 1526 or multimeter V.A.G 1715
- Adapter set V.A.G 1594
- Current flow diagram

Test conditions

- Air conditioner functioning OK.
- Air conditioner must be switched off
- No faults must be stored in fault memory
  => Page 6 , interrogating fault memory
- Vehicle at room temperature (warmer than + 15 °C).

Test sequence

- Connect fault reader V.A.G 1551 (V.A.G 1552). Start engine and select "Address word" 01 of engine control unit. When doing this the engine must be running at idling speed.
  (Connecting fault reader and selecting engine control unit => Page 2 .)

-> Indicated on display:

```
Rapid data transfer      HELP
Select function XX
```

- Press keys 0 and 8 for the function "Read measured value block" and confirm entry with Q key.

-> Indicated on display:

```
Read measured value block     HELP
Input display group number XXX
```

- Press keys 0, 0 and 1 for "Display group number 1" and confirm entry with Q key.

-> Indicated on display:
(1...4 = Display zones)

```
Read measured value block     1
     1     2     3     4
```

- Observe 8 digit number block in display zone 4. 3rd position from left must display 0.
  Display: 00000000

Copyright by Volkswagen AG. Protected by Volkswagen AG. Volkswagen AG does not guarantee acceptance liability with respect to the correctness of information in this document. Copyright by Volkswagen AG. Protected by Volkswagen AG. Copying for private or commercial purposes, in part or in whole, is not permitted unless authorised by Volkswagen AG.

satelettronica

- Switch on air conditioner. Adjust lowest temperature and highest blower stage.

  3rd position from left must now display 1
  Display: 00100000

If the display does not change:

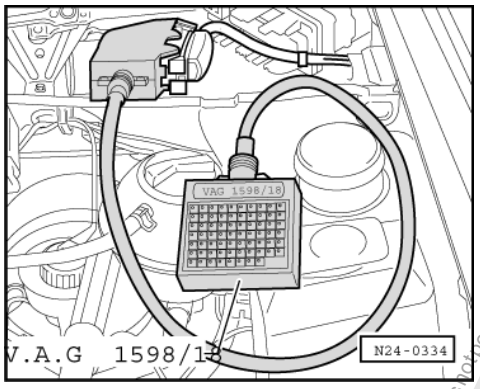

- -> Connect test box V.A.G 1598/18 to control unit wiring loom.
- Check wiring between test box sockets 33 and 35 and the air conditioner for open circuit according to current flow diagram.
  Wire resistance: Max. 1.5 ω

Protected by copyright. Copying for private or commercial purposes, in part or in whole, is not permitted unless authorised by Volkswagen AG. Volkswagen AG does not guarantee or accept any liability with respect to the correctness of information in this document. Copyright by Volkswagen AG.
satelettronica

28 - Ignition system

1 - Servicing ignition system

1.1 - Servicing ignition system

1.2 - General notes on ignition system

- Only the components which specifically relate to the ignition system are dealt with here. For the other components of the injection and ignition system => Repair group 24.
- Disconnecting and connecting the battery must only be done with the ignition switched off, otherwise the engine control unit could be damaged.
- The engine control unit is equipped with self diagnosis.
- Components marked with * are checked via the self diagnosis.
  => Page 6 , interrogating fault memory
- For trouble-free operation of the electrical components a voltage of at least 11.5 V is necessary.
- During some checks it is possible that the control unit will recognise and store a fault. Therefore after completing all checks and repairs the fault memory must be interrogated and if necessary erased.
  => Page 6 , interrogating and erasing fault memory

Safety precautions => Page 76

Test data, spark plugs => Page 76

Protected by copyright. Copyright by Volkswagen AG.
Copyright by Volkswagen AG. Volkswagen AG does not guarantee or accept any liability with respect to the correctness of information in this document.
Protected by copyright. Copying for private or commercial purposes, in part or in whole, is not permitted unless authorised by Volkswagen AG.
satelettronica

1.3 - Removing and installing parts of the ignition system

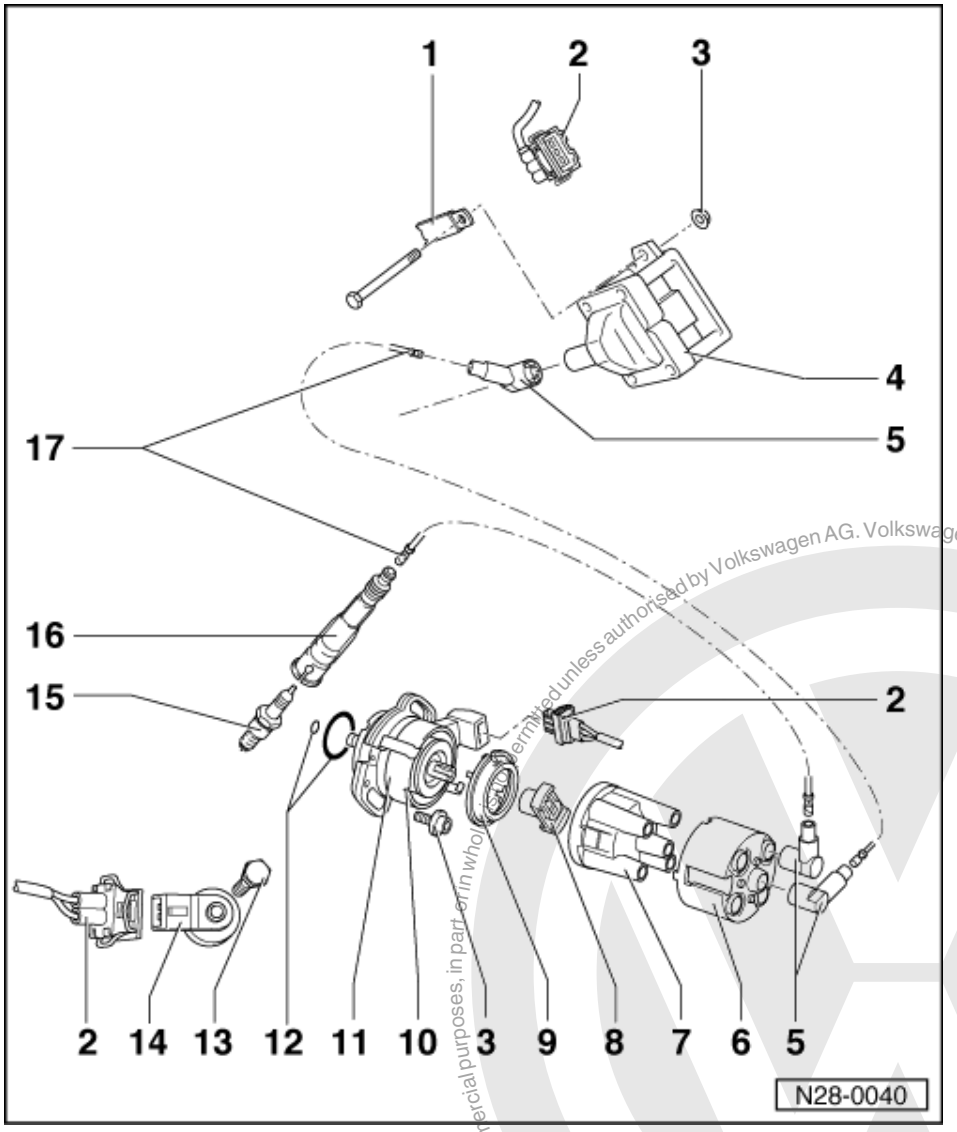

1 Earth strap
2 Connector
3 10 Nm
4 Ignition transformer (N152)
- With output stage (N157)
- Checking => Page 79

5 Suppressor
- 0.6...1.4 kω

6 Screening cap
7 Distributor cap
- Check for cracks and signs of tracking
- Check contact wear
- Clean before fitting
- Check carbon brush for wear and freedom of movement

Protected by copyright. Copying for private or commercial purposes, in part or in whole, is not permitted unless authorised by Volkswagen AG. Volkswagen AG does not guarantee or accept any liability with respect to the correctness of information in this document. Copyright by Volkswagen AG.
satelettronica

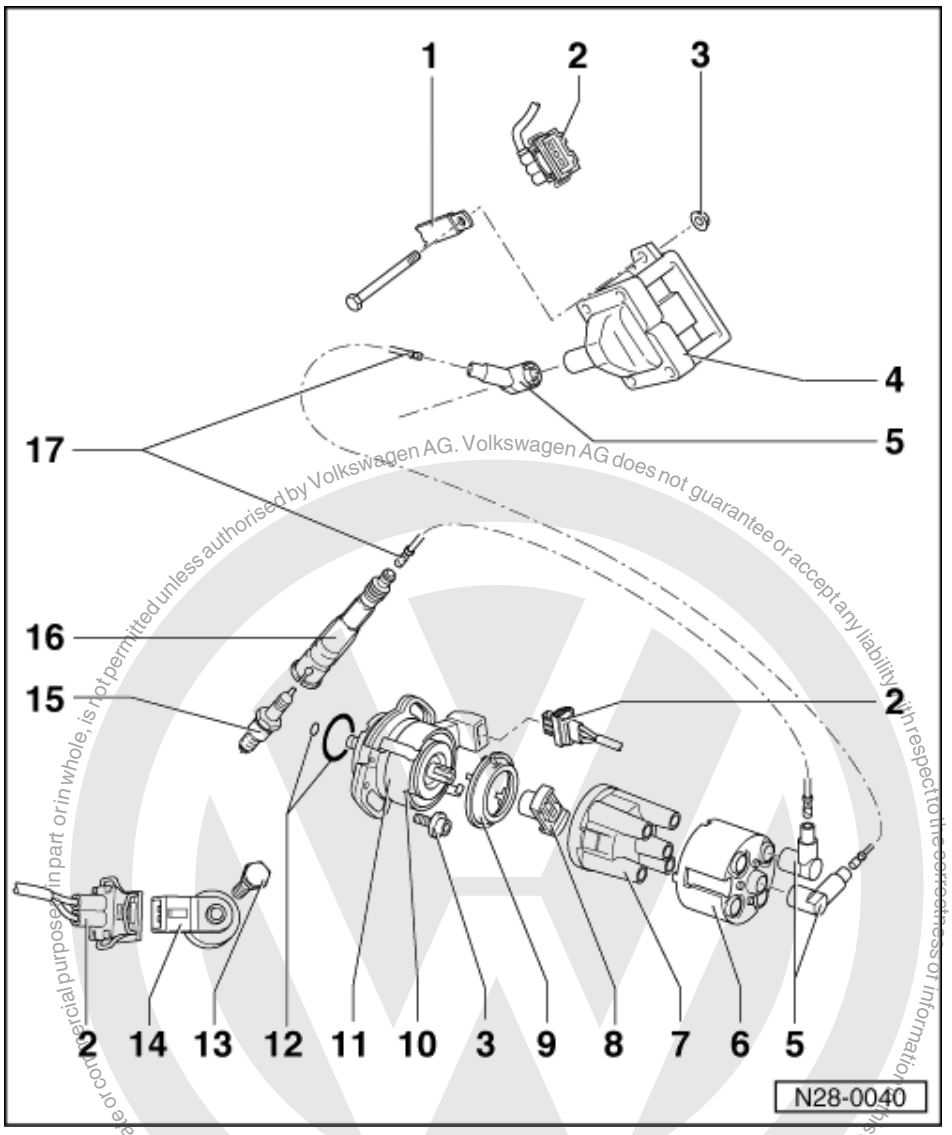

8 Rotor arm
- Marking: R1
- 0.6...1.4 kω

9 Dust cap

10 No. 1 Cyl. marking

11 Ignition distributor with Hall sender (G40)*
- Dismantling and assembling => Page 75
- Checking and adjusting ignition timing => Page 76
- Checking Hall sender
  => Page 78

12 O ring
- Renew if damaged

13 20 Nm
- Tightening torque influences the function of the knock sensor

Copyright by Volkswagen AG. Volkswagen AG does not guarantee or accept any liability with respect to the correctness of information in this document. Copyright by Volkswagen AG. Proprietary copyright. Commercial purposes in part or in whole, is not permitted unless authorised by Volkswagen AG.

satelettronica

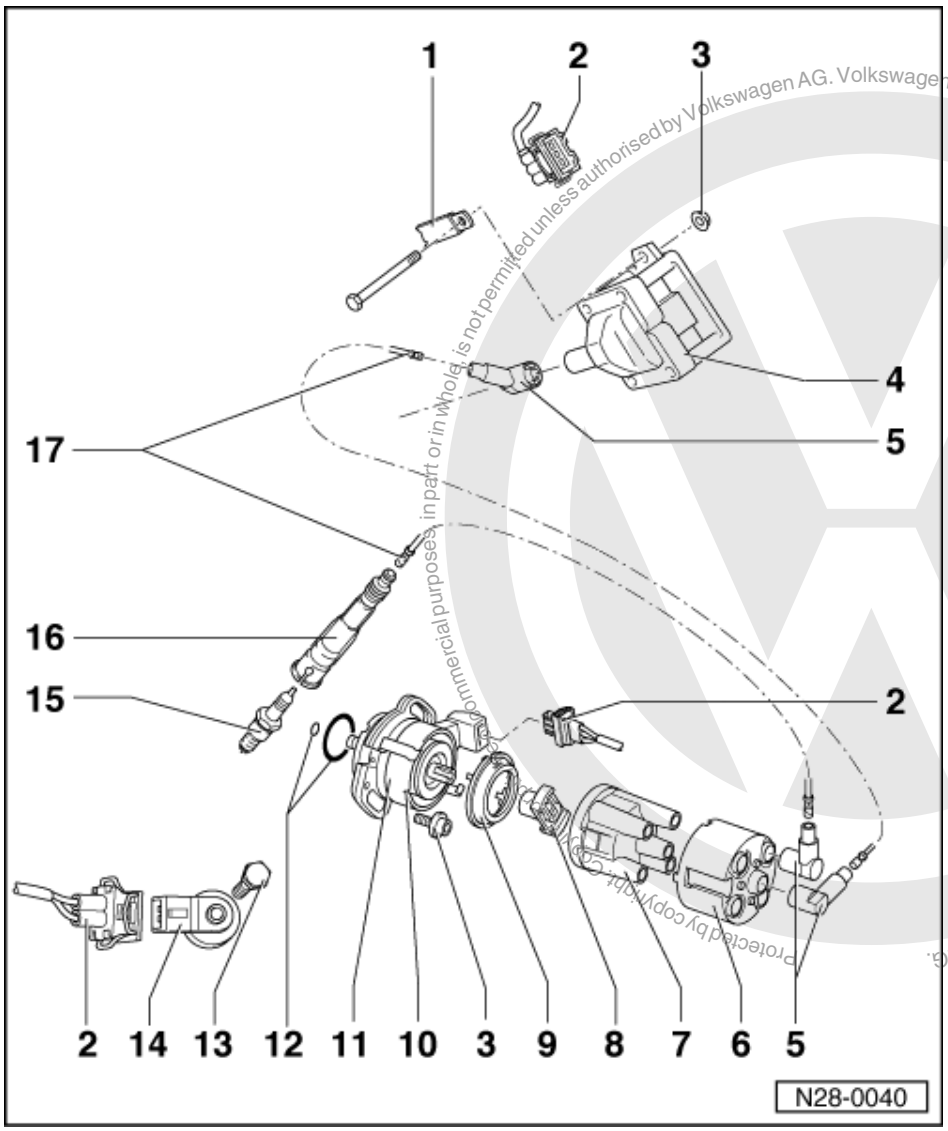

Protected by copyright. Copyright by Volkswagen AG. Volkswagen AG does not guarantee or accept any liability with respect to the correctness of information in this document. Copyright by Volkswagen AG.
Commercial purposes, in part or in whole, is not permitted unless authorised by Volkswagen AG.
satelettronica

14 Knock sensor 1 (G61)*

- Sensor and connector contacts are gold-plated

15 Spark plug, 25 Nm

- Type and electrode gap
  => Page 76

16 Spark plug connector

- 4...6 kω

17 H.T. cable

- Check for continuity

1.4 - Dismantling and assembling distributor

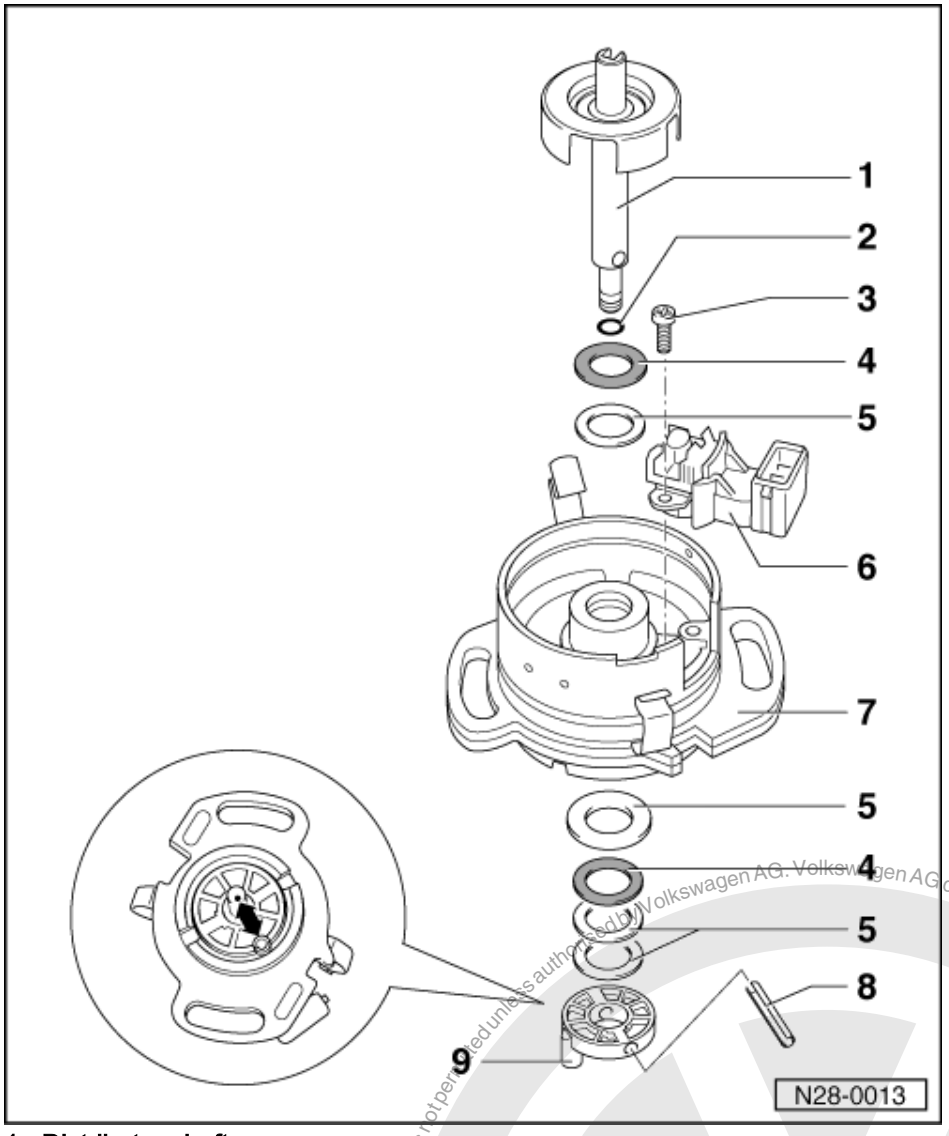

1 Distributor shaft
- With Hall sender rotor
- Pull out after removing the spring pin -7-

2 O ring
- Renew if damaged

3 3 Nm

4 Plastic washer

5 Shim(s)

6 Hall sender (G40)
- Checking => Page 78

7 Distributor body

8 Spring pin

9 Coupling
- Before removing mark position of drive tongue to shaft - 1 -

Protected by copyright. Copying for private or commercial purposes, in part or in whole, is not permitted unless authorised by Volkswagen AG. Volkswagen AG does not guarantee or accept any liability with respect to the correctness of information in this document. Copyright by Volkswagen AG.
satelettronica

1.5 - Safety precautions

To prevent injuries to persons and/or damage to the injection and ignition system, the following must be observed:

- Do not touch or pull off ignition wiring when engine is running or turning at starter speed.
- The ignition must be switched off when disconnecting or connecting injection and ignition system wiring as well as test instrument cables.
- If the engine is to be turned at starter speed, without starting, e.g. when checking compressions, pull plug off Hall sender (distributor).
- Do not connect a capacitor to terminal 1 (-).
- Do not replace 1 kω (identification: R1) with a different type even for radio interference suppression.
- For suppression purposes only 1 kω resistances are to be used on the H.T. leads and 5 kω spark plug connectors.

1.6 - Adjustment data, Spark plugs

Engine code	AEE, ALM
Ignition timing1)	
Test value	3...8 °BTDC
Adjusting value	6±1 °BTDC
Speed	1150...1400 rpm2)
Ignition timing	1-3-4-2
Spark plugs1)	
VW/Audi	101 000 036AA; 101 000 050AC; 101 000 040AD
Manufacturer's designation	BUR6ET; W7LTCR; 14GH-7DTUR
Electrode gap	BUR6ET, 14GH-7DTUR: 0.7...0.9 mm W7LTCR: 0.9...1.1 mm
Tightening torque	25 Nm

1) The up-to-date figures and the spark plug change intervals:

=> Exhaust emissions test binder

2) The rpm is increased by the engine control unit in "04 basic setting" function.

1.7 - Checking and adjusting ignition timing

Special tools, testers, measuring instruments and auxiliary items required

- Fault reader V.A.G 1551 or vehicle system tester V.A.G 1552 with cable V.A.G 1551/3
- Ignition tester V.A.G 1767 or V.A.G 1367 with HT pick-up clamp V.A.G 1367/8

Check conditions

- Coolant temperature at least 80 °C
- No faults must be stored in fault memory

Protected by copyright. Copying for private or commercial purposes, in part or in whole, is not permitted unless authorised by Volkswagen AG. Volkswagen AG does not guarantee or accept any liability with respect to the correctness of information in this document. Copyright by Volkswagen AG.

satelettronica

=> Page 6 , interrogating fault memory

Test sequence

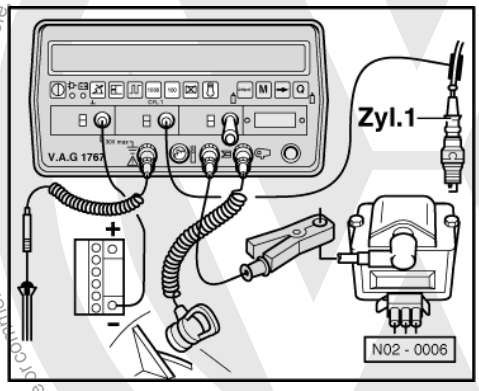

- => Connect ignition tester V.A.G 1767 or ignition tester V.A.G 1367 with HT pick-up clamp V.A.G 1367/8.
- Connect fault reader V.A.G 1551 (V.A.G 1552). Start engine and select "Address word" 01 of engine control unit. When doing this the engine must be running at idling speed.
  (Connecting fault reader and selecting engine control unit => Page 2 .)

-> Indicated on display:

```
Rapid data transfer        HELP
Select function XX
```

- Press keys 0 and 4 for the function "Introduction of basic setting" and confirm entry with Q key.

-> Indicated on display:

```
Basic setting      HELP
Input display group number XXX
```

- Press keys 0, 0 and 1 for "Display group number 1" and confirm entry with Q key.

-> Indicated on display:
(1...4 = Display zones)

```
System in basic setting 1
     1     2     3     4
```

Do not continue with check until an 8 digit number block 00000000 appears in the 4th display zone.

Note:

If at one or more positions a 1 is displayed in display zone 4, the test conditions have not been fulfilled:

=>Page 17 ; Relevance of figures in 8 digit number block

- The engine control unit increases the idling speed to 1150...1400 rpm.
- Check ignition timing.
  Specification: 3...8 ° before TDC1)
- Adjust ignition timing by turning distributor, if necessary.
  Adjustment figure: 6±1 ° before TDC1)

1) Up-to-date specifications:

=> Exhaust emissions test binder

- Press ⇒key.
- Press keys 0 and 6 for the function "End output" and confirm entry with the Q key.
- Check basic setting, if necessary.
  => Page 64 .

satelettronica

1.8 - Checking Hall sender

Special tools, testers, measuring instruments and auxiliary items required

- Test box V.A.G 1598/18
- Hand multimeter V.A.G 1526 or multimeter V.A.G 1715
- Adapter set V.A.G 1594
- Current flow diagram

Test conditions

- If a fault on Hall sender is recognised by self diagnosis.

Test sequence

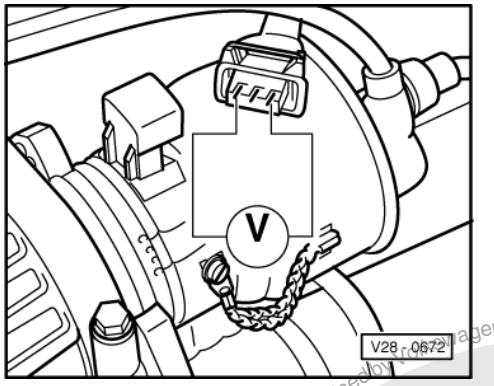

- Pull connector off Hall sender (distributor).
- -> Connect multimeter to measure voltage using aux. cables from V.A.G 1594 to the outer contacts of the connector.
- Switch on ignition.
  Specification: min. 9 V
- Switch off ignition.

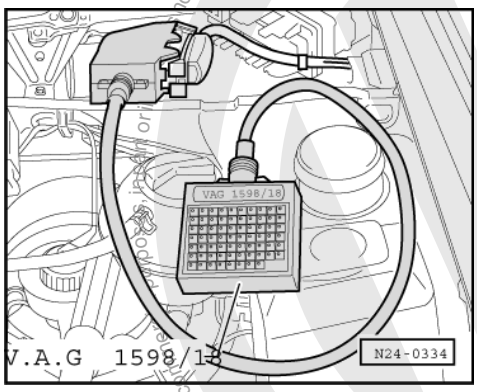

- -> Connect test box V.A.G 1598/18 to control unit wiring loom.
- Check wiring between test box and connector for open circuit according to current flow diagram.
  Contact 1+socket 17
  Contact 2+socket 13
  Contact 3+socket 8
  Wire resistance: Max. 1.5 ω
- Additionally check wires for short to one another.
  Specification: ∞ω

If no wiring fault is detected and voltage was present between contacts 1+3:

- Renew Hall sender => Page 75 , item 6 .

Protected by copyright. Copyright by Volkswagen AG. Volkswagen AG does not guarantee or accept any liability with respect to the correctness of information in this document.

satelettronica

If no wiring fault is detected and no voltage was present between contacts 1+3:

- Renew engine electronics control unit => Page 63 .

1.9 - Checking ignition transformer and output stage

Special tools, testers, measuring instruments and auxiliary items required

- Test box V.A.G 1598/18
- Hand multimeter V.A.G 1526 or multimeter V.A.G 1715
- Adapter set V.A.G 1594
- Diode test lamp V.A.G 1527
- Current flow diagram

Check conditions

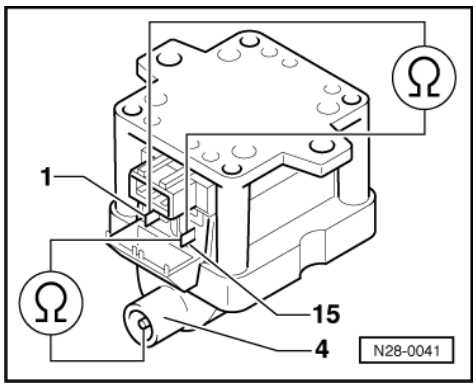

- Hall sender in distributor must be OK.

Checking ignition transformer

- Pull connector and H.T. cable off ignition transformer (N152).
- -> Check primary resistance between terminals 1 and 15.
  Specification: 0.5...1.5 ω
- Check secondary resistance between terminals 4 and 15.
  Specification: 2.5...4 kω

If the specifications are not attained:

- Replace ignition transformer => Page 72 , item 4 .

Checking voltage supply

- Pull 3 pin connector off ignition transformer.

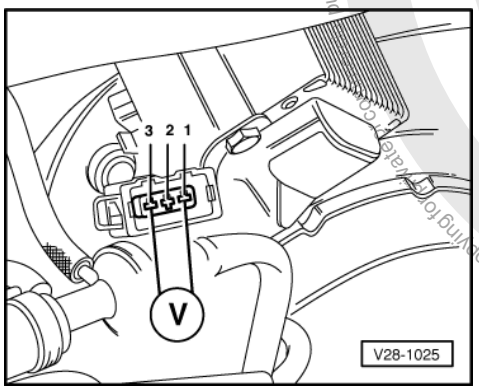

Protected by copyright. Copying for private or commercial purposes, in part or in whole, is not permitted unless authorised by Volkswagen AG. Volkswagen AG does not guarantee or accept any liability with respect to the correctness of information in this document. Copyright by Volkswagen AG.
satelettronica

- -> Connect multimeter to measure voltage with aux. cables from V.A.G 1594 to the contacts 1+3 of the disconnected plug.
- Switch ignition on.
  Specification: at least 11 V

If no voltage is present:

- Switch off ignition
- Check wire between 3 pin connector contact 1 and earth for open circuit according to current flow diagram.
  Wire resistance: Max. 1.5 ω
- Check wire between 3 pin connector contact 3 and relay plate for open circuit according to current flow diagram.
  Wire resistance: Max. 1.5 ω

Checking activation

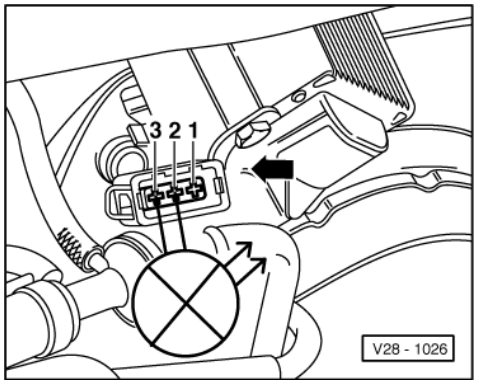

- Pull connector off injectors.
- -> Connect diode test lamp V.A.G 1527 with aux. cables from V.A.G 1594 and adapters V.A.G 1594/15 to contacts 2+3 of the plug.
- Operate starter and check ignition signal from engine control unit.
  LED must flicker

The LED does not flicker:

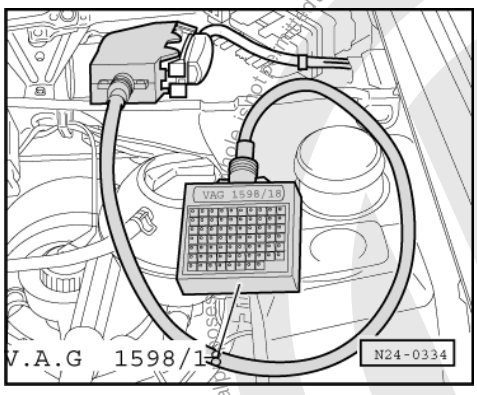

- -> Connect test box V.A.G 1598/18 to control unit wiring loom.
- Check wire between test box socket 24 and 3 pin connector contact 2 for open circuit according to current flow diagram.
  Wire resistance: Max. 1.5 ω
- Additionally check wires for short to one another.
  Specification: ∞ω

If no wiring fault is detected and voltage was present between contacts 1+3:

- Renew engine electronics control unit => Page 63 .

If the voltage supply and activation is OK.:

Protected by copyright. Copyright by Volkswagen AG. Volkswagen AG does not guarantee or accept any liability with respect to the correctness of information in this document. Copying for private or commercial purposes, in whole or in part, is not permitted unless authorised by Volkswagen AG.
satelettronica

- Connect 3 pin connector and H.T. cable to ignition transformer.

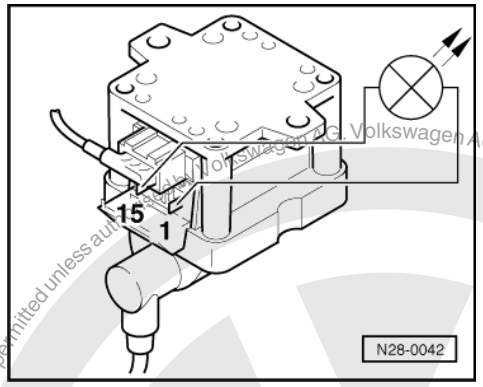

- -> Connect diode test lamp using aux. cables and clamps to the contacts 1 and 15 on ignition transformer.

Warning! During the following test do not touch the terminals of the ignition transformer or test cables.

- Operate starter.
  The LED must flicker

1.10 - Checking knock sensor

Special tools, testers, measuring instruments and auxiliary items required

- Test box V.A.G 1598/18
- Hand multimeter V.A.G 1526 or multimeter V.A.G 1715
- Adapter set V.A.G 1594
- Current flow diagram

Test conditions

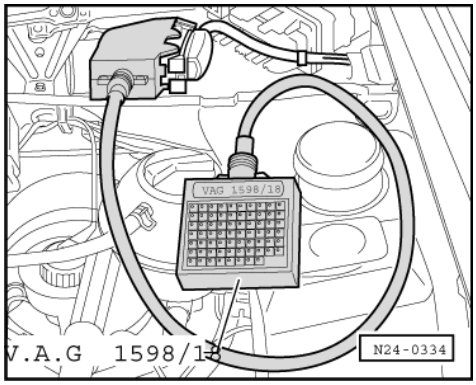

- Self-diagnosis has recognized a fault on knock sensor.

Test sequence

- -> Connect test box V.A.G 1598/18 to control unit wiring loom.
- Check wiring and knock sensor for short circuit.
  Sockets: 19+39, 39+45, 19+45
  Specification: ∞ω

If no short is detected:

Volkswagen AG does not guarantee or accept any liability with respect to the correctness of information in this document. Copyright by Volkswagen AG. Protected by copyright. Copying for private or commercial purposes, in part or in whole, is not permitted unless authorised by Volkswagen AG.
satelettronica

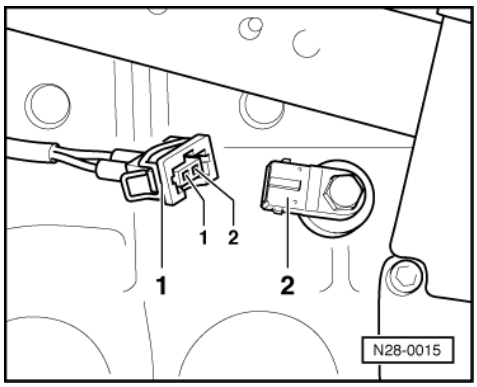

- -> Pull connector -1- off knock sensor 1 (G61) -2-.
- Check wiring between test box and knock sensor for open circuit according to current flow diagram.
  Contact 1+socket 39
  Contact 2+socket 19
  Wire resistance: Max. 1.5 ω
- Measure resistance between knock sensor contacts.
  Specification ∞ω

If no wiring fault is detected:

- Loosen knock sensor and tighten again to 20 Nm.
- Carry out test drive.

  During the road test the following operating conditions must be fulfilled:
  - The coolant temperature must exceed 80 °C .
  - When the temperature is reached, the operating conditions
    Idling
    Part throttle
    Full throttle
    Overrun
    must be attained several times.
  - At full throttle the speed must exceed 3500 rpm.

- Again interrogate the control unit fault memory.

If the fault is still present:

- Replace knock sensor
  =>Page 74 , item 14 .

Protected by copyright. Copying for private or commercial purposes, in part or in whole, is not permitted unless authorised by Volkswagen AG. Volkswagen AG does not guarantee or accept any liability with respect to the correctness of information in this document. Copyright by Volkswagen AG.
satelettronica